PRELIMINARY AND FINAL SITE PLAN

FOR

VOORHEES ROUTE 73 DEVELOPMENT GROUP, LLC

PROPOSED WAWA FOOD MARKET & FUELING STATION

BLOCK 36, LOT 11 & BLOCK 220, LOTS 9 & 16;

TAX MAP SHEETS #6.01 DATED 12/19/2014 & #26.03 DATED 10/01/2006

NJSH ROUTE 73 AND KRESSON ROAD (CR 671)

TOWNSHIP OF EVESHAM 08053 & TOWNSHIP OF VOORHEES 08043

BURLINGTON COUNTY & CAMDEN COUNTY, NEW JERSEY

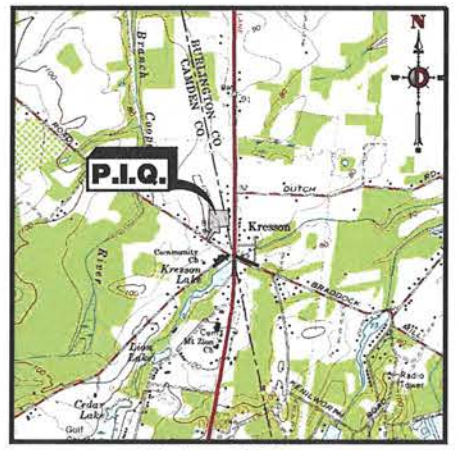

KEY MAP
1" = 2000'

200' PROPERTY OWNERS LIST

EVESHAM

BLOCK	LOT	ALSO TO BE NOTIFIED:	PROPERTY OWNER	BLOCK	LOT	ALSO TO BE NOTIFIED:
-		PUBLIC SERVICE ELECTRIC & GAS MANAGER – CORPORATE PROPERTIES 80 PARK PLAZA, T68 NEWARK, NJ 07102	PLATINUM PROPERTIES LLC 987 ROUTE 73 SOUTH MARLTON, NJ 08053	36	7, 8	EVESHAM MUNICIPAL UTILITY AUTHORITY 984 TUCKERTON ROAD MARLTON, NJ 08053
213.04	141					
213.04	142	ATLANTIC CITY ELECTRIC 51 HARDING AVENUE MAYS LANDING, NJ 08330	MONKEY-DUCK ASSOCIATES 989 ROUTE 73 SOUTH MARLTON, NJ 08053	36	9, 10	PUBLIC SERVICE ELECTRIC & GAS MANAGER – CORPORATE PROPERTIES 80 PARK PLAZA, T68 NEWARK, NJ 07102
URCH						
213.04	146	PUBLIC SERVICE ELECTRIC & GAS 300 NEW ALBANY ROAD MOORESTOWN, NJ 08057	VRI-W/J&J-VOORHEES I LLC 701 ROUTE 73 NORTH, SUITE 4 MARLTON, NJ 08053	36	11	VERIZON NJ PO BOX 2749 ADDISON, TX 75001
ELIZABETH						
220	6	CHARLES F. DIPPO AVP ENGINEERING SERVICES SOUTH JERSEY GAS COMPANY 1 SOUTH JERSEY PLAZA ROUTE 54 FOLSOM, NJ 08037	RICHARDS, DIANE & WRY, PEGGY-TRSTEE 405 ROUTE 73 VOORHEES, NJ 08043	36	12	CONECTIV REAL ESTATE DEPARTMENT 5100 HARDING HIGHWAY, SUITE 399 MAYS LANDING, NJ 08330
220	7		SCHNITZIUS, JOSEPH & MARGARET 405 ROUTE 73 NORTH VOORHEES, NJ 08043	36	13	COMCAST CABLE TV PO BOX 5025 CHERRY HILL, NJ 08034
J PART						
220	8	CAMDEN COUNTY MUNICIPAL UTILITIES AUTHORITY 1645 FERRY AVENUE CAMDEN, NJ 08104	900 ROUTE 73 SOUTH LLC 1539 EAST ROUTE 70, SUITE 210 CHERRY HILL, NJ 08003	37.01	2	SOUTH JERSEY GAS 1 SOUTH JERSEY PLAZA, ROUTE 54 FOLSOM, NJ 08037
220	9	NEW JERSEY AMERICAN WATER 131 WOODCREST ROAD CHERRY HILL, NJ 08003	DONAHUE, RUSSELL T 201 CHEYENNE TRAIL MEDFORD LAKES, NJ 08055	37.01	3	BURLINGTON COUNTY PLANNING BOARD PO BOX 6000 MOUNT HOLLY, NJ 08060
220	9.01	VERIZON – NEW JERSEY 540 BROAD STREET NEWARK, NJ 07101	DONAHUE, DARLENE JOYCE 940 ROUTE 73 SOUTH MARLTON, NJ 08053	37.01	4, 5, 6, 7	COMMISSIONER OF TRANSPORTATION 1035 PARKWAY AVENUE, CN 600 TRENTON, NJ 08625
I						
220	9.02	COMCAST 1250 HADDONFIELD–BERLIN ROAD CHERRY HILL, NJ 08003	MINS, ELIZABETH & RONALD 944 ROUTE 73 SOUTH MARLTON, NJ 08053	37.01	4.01, 5.01, 6.01, 8, 9	VOORHEES TOWNSHIP CLERK 2400 VOORHEES TOWN CENTER VOORHEES, NJ 08043
S & WRY						
220	10	NEW JERSEY DEPARTMENT OF TRANSPORTATION 1035 PARKWAY AVENUE PO BOX 600 TRENTON, NJ 08625	EAST 11TH AVENUE ASSOC LLC 261 HARVARD AVENUE WESTVILLE, NJ 08093	37.01	10, 11, 13	
EPH F						
220	11	CAMDEN COUNTY PLANNING BOARD 2311 EGG HARBOR ROAD LINDENWOLD, NJ 08021				
220	12	EVESHAM TOWNSHIP CLERK 984 TUCKERTON ROAD 2ND FLOOR, ROOM 201 MARLTON, NJ 08053				
VRET L						
220	14					
220	15					
220	16					
GOD INC						
220	17					

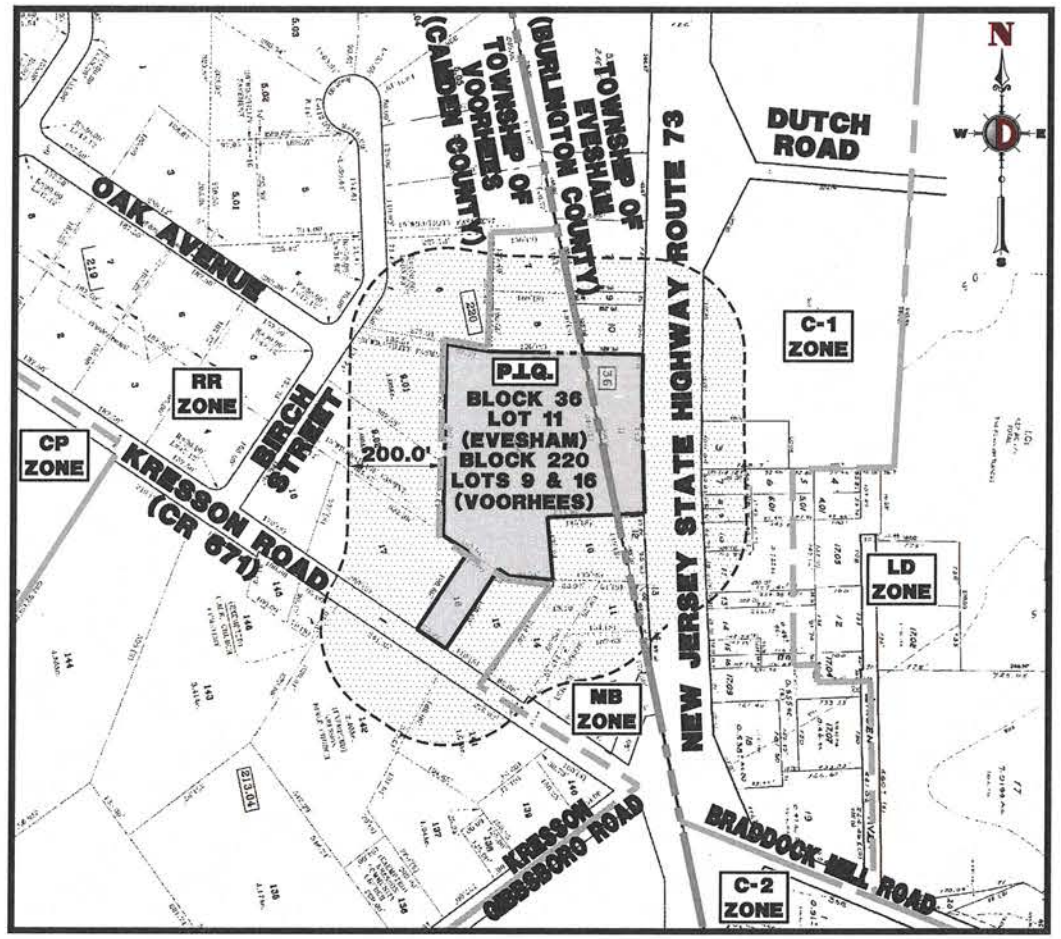

AREA MAP
1" = 200'

DRAWING INDEX

COVER SHEET	1 of 35
AERIAL MAP	2 of 35
GENERAL NOTES	3 of 35
ZONING NOTES	4 of 35
OVERALL DEMOLITION PLAN	5 of 35
DEMOLITION PLAN 'A'	6 of 35
DEMOLITION PLAN 'B'	7 of 35
OFF-SITE DEMOLITION PLAN	8 of 35
TREE PROTECTION MANAGEMENT PLAN	9 of 35
OVERALL SITE PLAN	10 of 35
SITE PLAN 'A'	11 of 35
SITE PLAN 'B'	12 of 35
COUNTY ROADWAY IMPROVEMENTS	13 of 35
GRADING PLAN 'A'	14 of 35
GRADING PLAN 'B'	15 of 35
DRAINAGE & UTILITY PLAN 'A'	16 of 35
DRAINAGE & UTILITY PLAN 'B'	17 of 35
OFF-SITE DRAINAGE & UTILITY PLAN	18 of 35
SANITARY PROFILES	19 of 35
COUNTY DRIVEWAY PROFILE	20 of 35
LANDSCAPE PLAN	21 of 35
LANDSCAPE NOTES & DETAILS	22 of 35
SOIL EROSION & SEDIMENT CONTROL PLAN 'A'	23 of 35
SOIL EROSION & SEDIMENT CONTROL PLAN 'B'	24 of 35
OFF-SITE SOIL EROSION & SEDIMENT CONTROL PLAN	25 of 35
SOIL EROSION & SEDIMENT CONTROL NOTES & DETAILS	26 of 35
SOIL MANAGEMENT & PREPARATION PLAN	27 of 35
CONSTRUCTION DETAILS	28 of 35
CONSTRUCTION DETAILS	29 of 35
CONSTRUCTION DETAILS	30 of 35
WAWA CONSTRUCTION DETAILS	31 of 35
WAWA CONSTRUCTION DETAILS	32 of 35
VEHICLE CIRCULATION PLAN – WB-50	33 of 35
VEHICLE CIRCULATION PLAN – FUEL TANKER	34 of 35
VEHICLE CIRCULATION PLAN – FIRE TRUCK	35 of 35
LIGHTING PLAN	1 of 3
LIGHTING DETAILS	2 of 3
LIGHTING NOTES	3 of 3

WAWA SITE DATA TABLE

PHYSICAL ADDRESS	NJSH ROUTE 73 & KRESSON ROAD (CR 671)
WAWA STORE NO.:	8422
BUILDING TYPE	WS0T
CANOPY TYPE	SLOPED
CANOPY CONFIGURATION	STACKED
NO. OF MPD'S	8
TYPE OF MPD'S	4 + 1
NO. OF PARKING SPACES	54
NO. OF HANDICAP PARKING SPACES	3
NO. OF TRUCK/ OVERSIZED PARKING SPACES	0
SQ. FT. OF ASPHALT (INSIDE R.O.W.)	45,349.33 SQ. FT.
SQ. FT. OF LAWN AREA (TO BE MOWED)	32,723.21 SQ. FT.
SQ. FT. OF MULCH AREA	3,242.39 SQ. FT.
CONTACT INFO: KRISTEN ISTZ – WAWA INC. 260 W. PLUMSIDE PIKE	

BOARD APPROVAL

ID OF TOWNSHIP OF VOORHEES, CAMDEN COUNTY, NEW JERSEY

DATE

DATE

DATE

DATE

PREPARED BY

DYNAMIC ENGINEERING CONSULTANTS, P.C.

1904 MAIN STREET

LAKE COMO, NJ 07719

WWW.DYNAMICEC.COM

THIS PLAN SET IS FOR PERMITTING PURPOSES ONLY AND MAY NOT BE USED FOR CONSTRUCTION

DYNAMIC ENGINEERING

LAND DEVELOPMENT CONSULTING • PERMITTING • GEOTECHNICAL • ENVIRONMENTAL • SURVEY • PLANNING & ZONING

1904 Main Street, Lake Como, NJ 07719 T: 732.974.0198 F: 732.974.3521 www.dynamicec.com

Additional offices conveniently located at: Chester, New Jersey T: 908.879.9229 | Toms River, New Jersey T: 732.974.0198 | Newtown, Pennsylvania T: 267.685.0276 Allen, Texas T: 972.534.2100 | Austin, Texas T: 512.646.2648 | Houston, Texas T: 281.789.6400 Delray Beach, Florida T: 561.921.8570

No.	Date	Comments	By
1	08/03/20	REV. PER TOWNSHIP ENGINEER & SEWER	RND

TITLE: COVER SHEET

PROJECT: VOORHEES ROUTE 73 DEVELOPMENT GROUP, LLC
PROPOSED WAWA FOOD MARKET & FUELING STATION
BLOCK 36, LOT 11 & BLOCK 220, LOTS 9 & 16
NJSH ROUTE 73 AND KRESSON ROAD (CR 671)
TOWNSHIP OF EVESHAM (BURLINGTON COUNTY) & TOWNSHIP OF VOORHEES (CAMDEN COUNTY) NEW JERSEY

JOB No: 0744-12-010
DATE: 12/10/19
DRAWN BY: GMC
SCALE: (H) AS (V) SHOWN
DESIGNED BY: MS
CHECKED BY: MAW
SHEET No: 1 OF 35

MATTHEW SHARO — PROFESSIONAL ENGINEER

MARK A. WHITAKER — PROFESSIONAL ENGINEER

CONSTRUCTION CHECK — DATE

CONSTRUCTION CHECK — DATE

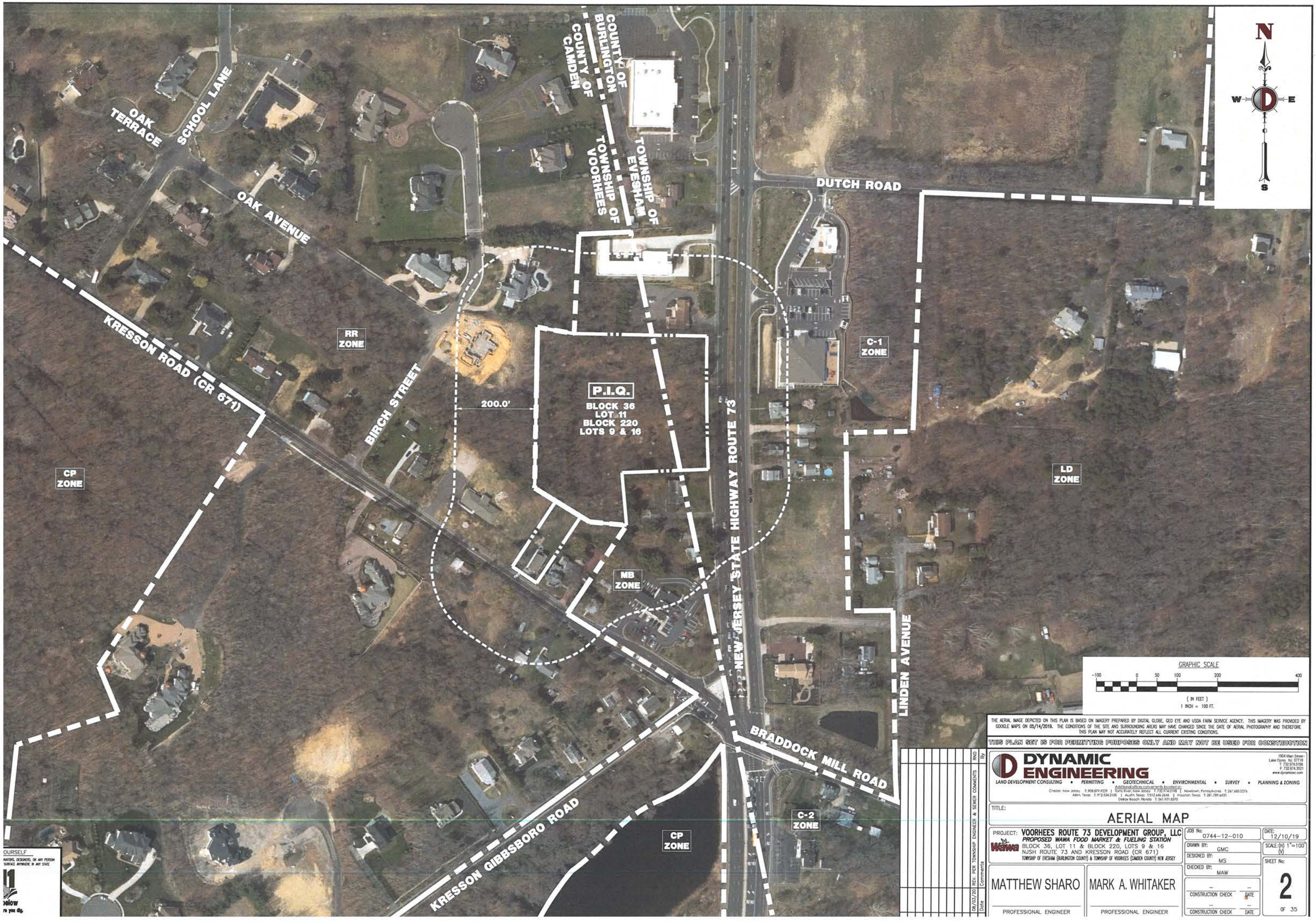

GRAPHIC SCALE

-100 0 50 100 200 400

(IN FEET)
1 INCH = 100 FT.

THE AERIAL IMAGE DEPICTED ON THIS PLAN IS BASED ON IMAGERY PREPARED BY DIGITAL GLOBE, GEO EYE AND USDA FARM SERVICE AGENCY. THIS IMAGERY WAS PROVIDED BY GOOGLE MAPS ON 05/14/2019. THE CONDITIONS OF THE SITE AND SURROUNDING AREAS MAY HAVE CHANGED SINCE THE DATE OF AERIAL PHOTOGRAPHY AND THEREFORE THIS PLAN MAY NOT ACCURATELY REFLECT ALL CURRENT EXISTING CONDITIONS.

THIS PLAN SET IS FOR PERMITTING PURPOSES ONLY AND MAY NOT BE USED FOR CONSTRUCTION

By	Date	Comments
RND	08/03/20	REV. PER TOWNSHIP ENGINEER & SEWER

DYNAMIC ENGINEERING
LAND DEVELOPMENT CONSULTING • PERMITTING • GEOTECHNICAL • ENVIRONMENTAL • SURVEY • PLANNING & ZONING
1904 Main Street - Lake Como, NJ. 07719 T: 732.974.0198 F: 732.974.3521 www.dynamicec.com
Additional offices conveniently located at: Chester, New Jersey T: 908.879.9229 | Toms River, New Jersey T: 732.974.0198 | Newtown, Pennsylvania T: 267.685.0276 | Allen, Texas T: 972.534.2100 | Austin, Texas T: 512.646.2648 | Houston, Texas T: 281.789.6400 | Delray Beach, Florida T: 561.921.8570

TITLE: AERIAL MAP

PROJECT: VOORHEES ROUTE 73 DEVELOPMENT GROUP, LLC
PROPOSED WAWA FOOD MARKET & FUELING STATION
BLOCK 36, LOT 11 & BLOCK 220, LOTS 9 & 16
NJSH ROUTE 73 AND KRESSON ROAD (CR 671)
TOWNSHIP OF EVESHAM (BURLINGTON COUNTY) & TOWNSHIP OF VOORHEES (CAMDEN COUNTY) NEW JERSEY

JOB No: 0744-12-010
DATE: 12/10/19
DRAWN BY: GMC
SCALE: (H) 1"=100' (V)
DESIGNED BY: MS
CHECKED BY: MAW
SHEET No: 2 OF 35

MATTHEW SHARO
PROFESSIONAL ENGINEER

MARK A. WHITAKER
PROFESSIONAL ENGINEER

CONSTRUCTION CHECK DATE
CONSTRUCTION CHECK DATE

GRADING NOTES

1. SITE GRADING SHALL BE PERFORMED IN ACCORDANCE WITH THESE PLANS AND SPECIFICATIONS AND THE RECOMMENDATIONS SET FORTH IN THE SOILS REPORT REFERENCED IN THIS PLAN SET. THE CONTRACTOR SHALL BE RESPONSIBLE FOR REMOVING AND REPLACING ALL SOFT, YIELDING OR UNSUITABLE MATERIALS AND REPLACING WITH SUITABLE MATERIALS AS SPECIFIED IN THE SOILS REPORT. ALL EXCAVATED OR FILLED AREAS SHALL BE COMPACTED TO 95% OF MODIFIED PROCTOR MAXIMUM DENSITY PER A.S.T.M. TEST D-1557. MOISTURE CONTENT AT TIME OF PLACEMENT SHALL NOT EXCEED 2% ABOVE NOR 3% BELOW OPTIMUM. CONTRACTOR SHALL SUBMIT A COMPACTION REPORT PREPARED BY A QUALIFIED SOILS ENGINEER, REGISTERED WITHIN THE STATE WHERE THE WORK IS PERFORMED, VERIFYING THAT ALL FILLED AREAS AND SUBGRADE AREAS WITHIN THE BUILDING PAD AREA AND AREAS TO BE PAVED HAVE BEEN COMPACTED IN ACCORDANCE WITH THESE PLANS AND SPECS AND THE RECOMMENDATIONS SET FORTH IN THE SOILS REPORT.
2. CONTRACTOR IS RESPONSIBLE FOR VERIFICATION OF EXISTING TOPOGRAPHIC INFORMATION AND UTILITY INVERT ELEVATIONS PRIOR TO COMMENCEMENT OF ANY CONSTRUCTION. CONTRACTOR TO ENSURE 0.75% MIN. SLOPE AGAINST ALL ISLAND GUTTERS, CURBS AND 1.0% ON ALL CONCRETE SURFACES, AND 1-1/2% MIN. ON ASPHALT, TO PREVENT PONDING. ANY DISCREPANCIES THAT MAY EFFECT THE PUBLIC SAFETY OR PROJECT COST, MUST BE IDENTIFIED TO THE ENGINEER IN WRITING IMMEDIATELY. PROCEEDING WITH CONSTRUCTION WITH DESIGN DISCREPANCIES IS DONE SO AT THE CONTRACTOR'S OWN RISK.
3. PROPOSED TOP OF CURB ELEVATIONS ARE GENERALLY 6" ABOVE EXISTING LOCAL ASPHALT GRADE UNLESS OTHERWISE NOTED. FIELD ADJUST TO CREATE A MIN. OF 0.75% GUTTER GRADE ALONG CURB FACE. ENGINEER TO APPROVE FINAL CURBING CUT SHEETS PRIOR TO INSTALLATION.
4. SUBBASE MATERIAL FOR SIDEWALKS, CURB, OR ASPHALT SHALL BE FREE OF ORGANICS AND OTHER UNSUITABLE MATERIALS. SHOULD SUBBASE BE DEEMED UNSUITABLE, SUBBASE IS TO BE REMOVED AND FILLED WITH APPROVED FILL MATERIAL COMPACTED TO 95% OPTIMUM DENSITY (AS DETERMINED BY MODIFIED PROCTOR METHOD).
5. REFER TO SITE PLAN FOR ADDITIONAL NOTES.
6. IN CASE OF DISCREPANCIES BETWEEN PLANS, THE SITE PLAN WILL SUPERCEDE IN ALL CASES. CONTRACTOR MUST NOTIFY ENGINEER OF RECORD OF ANY CONFLICT IMMEDIATELY.
7. MAXIMUM CROSS SLOPE OF 2% ON ALL SIDEWALKS.
8. CONTRACTOR TO ENSURE A MAXIMUM OF 2% SLOPE IN ALL DIRECTIONS IN ADA PARKING SPACES AND ADA ACCESS AISLES. CONTRACTOR TO ENSURE A MAXIMUM OF 5% RUNNING SLOPE AND 2% CROSS SLOPE ALONG ALL OTHER PORTIONS OF ACCESSIBLE ROUTE, WITH THE EXCEPTION OF RAMPS AND CURB RAMPS. CONTRACTOR SHALL CLARIFY ANY QUESTIONS CONCERNING CONSTRUCTION IN ADA AREAS WITH THE ENGINEER PRIOR TO THE START OF CONSTRUCTION.
9. THE OWNER SHALL RETAIN DYNAMIC EARTH, LLC (908-879-7095) OR ALTERNATE QUALIFIED GEOTECHNICAL ENGINEER TO TEST SOIL PERMEABILITY AND PROVIDE CONSTRUCTION PHASE INSPECTIONS OF THE BASIN BOTTOM SOILS AND ANY FILL MATERIALS WITHIN ANY PROPOSED INFILTRATION OR RETENTION BASIN TO COMPARE RESULTS TO DESIGN CRITERIA.
10. CONTRACTOR IS TO REMOVE EXISTING UNSUITABLE OR OVERLY COMPACT SOIL OR ROCK AS NEEDED TO ACHIEVE REQUIRED PERMEABILITY AS DIRECTED BY THE OWNERS GEOTECHNICAL ENGINEER, AND NEW FILL, IF NEEDED, SHALL HAVE AN IN PLACE PERMEABILITY GREATER THAN OR EQUAL TO THE DESIGN CRITERIA.
11. CONTRACTOR IS RESPONSIBLE FOR CONTACTING THE OWNER'S GEOTECHNICAL ENGINEER PRIOR TO ONSET OF CONSTRUCTION TO SUBMIT AND CONFIRM THE CONTRACTOR'S PROPOSED MEANS AND MATERIALS AND TO SCHEDULE INSPECTIONS FOR BOTTOM OF BASIN, REMOVAL OF UNSUITABLE SOIL, FILL PLACEMENT, AND FINAL BASIN PERMEABILITY TESTING.
12. THE CONTRACTOR IS RESPONSIBLE FOR AS-BUILT PLANS AND GRADE CONTROL UNLESS DEFINED OTHERWISE ELSEWHERE IN THE CONTRACT DOCUMENTS.

UNDERGROUND DETENTION/INFILTRATION BASIN MAINTENANCE NOTES

1. OUTLET STRUCTURE IS TO BE INSPECTED ANNUALLY AND RESIDUAL SEDIMENTATION IS TO BE REMOVED AND PROPERLY DISPOSED OF IN ACCORDANCE WITH APPLICABLE MUNICIPAL, COUNTY, AND STATE REGULATIONS AS NECESSARY.
2. INLETS ARE TO BE INSPECTED AND CLEANED TO REMOVE SEDIMENTATION, TRASH AND/OR DEBRIS EVERY SIX (6) MONTHS, OR AS NECESSARY, TO ENSURE PROPER FUNCTION.
3. TOP OF BASIN FIELD TO BE INSPECTED FOR INDICATION OF SETTLEMENT. MUNICIPAL ENGINEER TO BE ADVISED IMMEDIATELY IF SETTLEMENT WITNESSED SO THAT PLAN FOR REPAIR, IF NECESSARY, CAN BE MADE.
4. PIPES AND BEDDING TO BE INSPECTED AT THE REQUEST OF THE MUNICIPAL ENGINEER OR AS REQUIRED IF EXCESSIVE SEDIMENT BUILDUP IS WITNESSED. PIPE NETWORK SYSTEM TO BE CLEANED OF SEDIMENTATION AND DEBRIS PER THE DIRECTION OF THE MUNICIPAL ENGINEER AND/OR BASIN MAINTAINING REPORT. DEBRIS TO BE REMOVED AND DISPOSED OF IN ACCORDANCE WITH MUNICIPAL, COUNTY AND STATE REGULATIONS.

UTILITY NOTES

1. LOCATION OF ALL EXISTING AND PROPOSED SERVICES ARE APPROXIMATE AND MUST BE CONFIRMED INDEPENDENTLY WITH LOCAL UTILITY COMPANIES PRIOR TO COMMENCEMENT OF ANY CONSTRUCTION OR EXCAVATION. SANITARY SEWER AND ALL OTHER UTILITY SERVICE CONNECTION POINTS SHALL BE CONFIRMED INDEPENDENTLY BY THE CONTRACTOR IN FIELD PRIOR TO THE COMMENCEMENT OF CONSTRUCTION. ALL DISCREPANCIES SHALL BE REPORTED IMMEDIATELY IN WRITING TO THE ENGINEER. CONSTRUCTION SHALL COMMENCE BEGINNING AT THE LOWEST INVERT (POINT OF CONNECTION) AND PROGRESS UP GRADIENT. INTERFACE POINTS (CROSSINGS) WITH EXISTING UNDERGROUND UTILITIES SHALL BE FIELD VERIFIED BY TEST PIT PRIOR TO COMMENCEMENT OF CONSTRUCTION.
2. IT SHALL BE THE CONTRACTOR'S RESPONSIBILITY TO NOTIFY UTILITY "ONE-CALL" NUMBER 72 HOURS PRIOR TO ANY EXCAVATION ON THIS SITE. CONTRACTOR SHALL ALSO NOTIFY LOCAL WATER & SEWER DEPARTMENTS TO MARK OUT THEIR UTILITIES.
3. REFER TO ARCHITECTURAL DRAWINGS FOR EXACT BUILDING UTILITY CONNECTION LOCATIONS. WHERE CONFLICTS EXIST WITH THESE SITE PLANS, ENGINEER IS TO BE NOTIFIED PRIOR TO CONSTRUCTION TO RESOLVE SAME. SERVICE SIZES TO BE DETERMINED BY ARCHITECT.
4. WATER SERVICE MATERIALS SHALL BE SPECIFIED BY THE LOCAL UTILITY COMPANY. CONTRACTORS PRICE FOR WATER SERVICE SHALL INCLUDE ALL FEES AND APPURTENANCES REQUIRED BY THE UTILITY TO PROVIDE A COMPLETE WORKING SERVICE.
5. ALL WATER MAIN SHALL BE CEMENT-LINED, CLASS 52 DUCTILE IRON PIPE, UNLESS OTHERWISE DESIGNATED.
6. THE MINIMUM DIAMETER FOR DOMESTIC WATER SERVICES SHALL BE 1 INCH.
7. SEWER MAINS SHALL BE SEPARATED FROM WATER MAINS BY A DISTANCE OF AT LEAST 10 FEET HORIZONTALLY. WHERE THIS IS NOT POSSIBLE, THE PIPES SHALL BE IN SEPARATE TRENCHES WITH THE SEWER MAIN AT LEAST 18 INCHES BELOW THE WATER MAIN. ALL SEWER MAINS SHALL BE SDR-35 PVC PIPE UNLESS OTHERWISE DESIGNATED.
8. ALL SEWER PIPE INSTALLED WITH LESS THAN 3 FEET OF COVER, GREATER THAN 20 FEET OF COVER OR WITHIN 18 INCHES OF A WATER MAIN SHALL BE CONSTRUCTED OF DUCTILE IRON PIPE. ALL DUCTILE IRON SEWER PIPE SHALL BE CEMENT-LINED, CLASS 52 PIPE, FURNISHED WITH SEWER COAT, OR APPROVED EQUAL.
9. WHERE SANITARY SEWER LATERALS ARE GREATER THAN 10' DEEP AT CONNECTION TO THE SEWER MAIN, CONCRETE DEEP LATERAL CONNECTIONS ARE TO BE UTILIZED.
10. LOCATION & LAYOUT OF GAS, ELECTRIC & TELECOMMUNICATION UTILITY LINES AND SERVICES SHOWN ON THESE PLANS ARE SCHEMATIC IN NATURE. ACTUAL LOCATION & LAYOUT OF THESE UTILITIES & SERVICES ARE TO BE PER THE APPROPRIATE UTILITY PROVIDER.
11. ROOF LEADER COLLECTION PIPING ARE CONCEPTUAL IN NATURE AND ARE NOT FOR CONSTRUCTION. ACTUAL ROOF LEADER COLLECTION PIPING IS TO BE COORDINATED W/ ARCHITECTURAL PLANS FOR EACH INDIVIDUAL BUILDING. ALL ROOF LEADER COLLECTION PIPING SHALL BE SCHEDULE 40 PVC UNLESS OTHERWISE DESIGNATED.
12. ALL SEWER AND WATER FACILITIES SHALL BE CONSTRUCTED IN ACCORDANCE WITH THE REGULATORY AUTHORITY'S RULES AND REGULATIONS.
13. ALL PROPOSED UTILITIES TO BE INSTALLED UNDERGROUND UNLESS OTHERWISE NOTED.
14. MANUFACTURED REINFORCED CONCRETE STORM PIPE TO CONFORM TO ASTM C-76, CLASS III, UNLESS OTHERWISE DESIGNATED. MANUFACTURED REINFORCED CONCRETE ELLIPTICAL STORM PIPE TO CONFORM TO ASTM C-507, CLASS HE-III, UNLESS OTHERWISE DESIGNATED. REINFORCED CONCRETE STORMWATER PIPE TO BE INSTALLED IN ACCORDANCE WITH AMERICAN CONCRETE PIPE ASSOCIATION INSTALLATION GUIDELINES AND MORTAR OR PREFORMED FLEXIBLE JOINT SEALANTS IN ACCORDANCE WITH ASTM C 990 TO BE UTILIZED TO PROVIDE A SILT-TIGHT JOINT. WHERE SPECIFICALLY INDICATED, REINFORCED CONCRETE STORM PIPE JOINTS SHALL BE WATERTIGHT AND CONFORM TO ASTM C-443.
15. HDPE DRAINAGE PIPE SHALL HAVE A SMOOTH WALL INTERIOR WITH ANNULAR EXTERIOR CORRUGATIONS AND CONFORM TO ASTM F2306. SOLID PIPE SHALL HAVE GASKETED WATER-TIGHT JOINTS MEETING THE REQUIREMENTS OF ASTM F2306 AND ASTM D3212. PERFORATED PIPE SHALL HAVE GASKETED SILT-TIGHT JOINTS MEETING THE REQUIREMENTS OF ASTM F2306 AND ASTM F477. HDPE PIPE SHALL BE FROM A MANUFACTURER WHO IS AN EASTERN STATES CONSORTIUM (ESC) QUALIFIED MANUFACTURER OF HDPE PIPE AND INSTALLED IN ACCORDANCE WITH PIPE MANUFACTURE RECOMMENDATIONS.
16. HP DRAINAGE PIPE SHALL HAVE A SMOOTH WALL INTERIOR WITH ANNULAR EXTERIOR CORRUGATIONS AND CONFORM TO ASTM F2736 (12"-30" PIPE) AND ASTM F2881 (36"-60" PIPE). PIPE SHALL HAVE GASKETED WATER-TIGHT JOINTS MEETING THE REQUIREMENTS OF ASTM D3212 AND ASTM F477. FIELD WATERTIGHTNESS PERFORMANCE VERIFICATION MAY BE ACCOMPLISHED IN ACCORDANCE WITH ASTM F2487. HP PIPE SHALL BE FROM A MANUFACTURER WHO IS AN EASTERN STATES CONSORTIUM (ESC) QUALIFIED MANUFACTURER OF HP STORM PIPE AND INSTALLED IN ACCORDANCE WITH PIPE MANUFACTURER RECOMMENDATIONS.
17. PIPE LENGTHS ON THIS PLAN HAVE BEEN MEASURED AS THE DISTANCE BETWEEN THE CENTER POINT OF THE 2 CONNECTED STRUCTURES. ACTUAL PHYSICAL PIPE LENGTH FOR INSTALLATION IS EXPECTED TO BE LESS AND SHOULD BE ACCOUNTED FOR BY THE CONTRACTOR ACCORDINGLY.
18. ALL NEWLY CONSTRUCTED GRAVITY SANITARY SEWERS AND LATERALS MUST BE TELEVISED BY THE APPLICANT AND A DVD COPY OF THE VIDEO INSPECTION AND INSPECTION REPORT PROVIDED FOR THE TOWNSHIP SEWER DEPARTMENT'S REVIEW AND APPROVAL.
19. THE PROPOSED 8-INCH GRAVITY SEWER WITHIN THE ACCESS DRIVE IN LOT 16 WIL BE OWNED AND MAINTAINED BY THE PROPERTY OWNER.
20. THE APPLICANT MUST OBTAIN THE APPROPRIATE ROAD OPENING PERMIT(S) FROM CAMDEN COUNTY FOR THE CONSTRUCTION OF THE PROPOSED OFF-SITE SANITARY SEWER IN THE KRESSON ROAD RIGHT-OF-WAY.

EXISTING UTILITY NOTES

EXISTING WATER SERVICE NOTE: CONTRACTOR TO LOCATE AND UTILIZE EXISTING WATER SERVICE CONNECTION IF FEASIBLE. OTHERWISE REMOVE EXISTING WATER SERVICE LINE AND CAP AT MAIN IN R.O.W. IN ACCORDANCE WITH THE LOCAL WATER COMPANY REQUIREMENTS. TERMINATION AT THE MAIN MUST BE APPROVED BY THE LOCAL WATER COMPANY PRIOR TO COMPLETION. IF THE EXISTING WATER SERVICE CAN NOT BE UTILIZED, THE NEW SERVICE IS TO BE COORDINATED AND VERIFIED FOR LOCATION WITH THE LOCAL WATER COMPANY. CONTRACTOR SHALL OBTAIN ALL REQUIRED STREET OPENING PERMITS FOR REMOVAL OF EXISTING SERVICE AND INSTALLATION OF NEW SERVICE.

EXISTING GAS SERVICE NOTE: CONTRACTOR TO LOCATE AND UTILIZE EXISTING GAS SERVICE CONNECTION IF FEASIBLE. OTHERWISE REMOVE EXISTING GAS SERVICE LINE AND CAP AT MAIN IN R.O.W. IN ACCORDANCE WITH THE LOCAL GAS COMPANY REQUIREMENTS. TERMINATION AT THE MAIN MUST BE APPROVED BY THE LOCAL GAS COMPANY PRIOR TO COMPLETION. ANY NEW SERVICE IS TO BE COORDINATED AND VERIFIED FOR LOCATION WITH THE LOCAL GAS COMPANY. THE CONTRACTOR SHALL OBTAIN ALL REQUIRED STREET OPENING PERMITS FOR REMOVAL OF EXISTING SERVICE AND INSTALLATION OF NEW SERVICE.

SANITARY SEWER SERVICE NOTE: CONTRACTOR TO LOCATE AND UTILIZE EXISTING SEWER SERVICE CONNECTION IF OF ADEQUATE SIZE AND INTEGRITY AND ACCEPTABLE TO LOCAL SEWER AUTHORITY. OTHERWISE CONTRACTOR TO REMOVE EXISTING SEWER SERVICE LINE AND CAP AT MAIN IN R.O.W. IN ACCORDANCE WITH THE LOCAL SEWER AUTHORITY REQUIREMENTS. TERMINATION AT THE MAIN MUST BE APPROVED BY THE LOCAL SEWER AUTHORITY PRIOR TO COMPLETION. IF EXISTING SEWER SERVICE CAN NOT BE UTILIZED THEN THE NEW SERVICE IS TO BE COORDINATED AND VERIFIED FOR LOCATION WITH THE LOCAL SEWER AUTHORITY. CONTRACTOR SHALL OBTAIN ALL REQUIRED STREET OPENING PERMITS FOR REMOVAL OF EXISTING SERVICE AND INSTALLATION OF NEW SERVICE.

LIGHTING GENERAL NOTES

1. THIS LIGHTING PLAN ILLUSTRATES ILLUMINATION LEVELS CALCULATED FROM LABORATORY DATA TAKEN UNDER CONTROLLED CONDITIONS IN ACCORDANCE WITH ILLUMINATING ENGINEERING SOCIETY OF NORTH AMERICA (IESNA) APPROVED METHODS. ACTUAL SITE ILLUMINATION LEVELS AND PERFORMANCE OF LUMINARIES MAY VARY DUE TO VARIATIONS IN WEATHER, ELECTRICAL VOLTAGE, TOLERANCE IN LAMPS, AND OTHER RELATED VARIABLE FIELD CONDITIONS.
2. ALL EXISTING CONDITIONS LIGHTING LEVELS ARE REPRESENTATIVE OF AN APPROXIMATION UTILIZING LABORATORY DATA FOR SIMILAR FIXTURES AND/OR ACTUAL FIELD MEASUREMENTS TAKEN WITH A LIGHT METER. DUE TO FACTORS SUCH AS FIXTURE MAINTENANCE, EQUIPMENT TOLERANCES, WEATHER CONDITIONS, ETC., ACTUAL LIGHTING LEVELS MAY DIFFER AND THE LIGHTING LEVELS DEPICTED ON THIS PLAN SHOULD BE CONSIDERED AS APPROXIMATE.
3. CONDUITS SHALL BE INSTALLED A MINIMUM OF 2 FEET BEHIND GUIDERAIL POSTS.
4. ALL WIRING METHODS AND EQUIPMENT CONSTRUCTION SHALL CONFORM TO THE CURRENT NATIONAL ELECTRICAL CODE.

DEMOLITION NOTES - TREE MANAGEMENT

TREE MANAGEMENT REQUIREMENTS

TOWNSHIP OF EVESHAM:

A. THE FOLLOWING CONSERVATION PRACTICES ARE MANDATORY, AND SHALL BE NOTED AS SUCH ON THE APPROVED TREE PROTECTION MANAGEMENT PLAN, AND EMPLOYED IN ORDER TO PRESERVE EXISTING TREES: (§62-56.D.5.A)
I. ALL TREES, NATURAL FEATURES AND OTHER VEGETATION TO BE PRESERVED SHALL BE PROTECTED FROM EQUIPMENT DAMAGE BY A FOUR-FOOT-HIGH SELF-SUPPORTING PROTECTIVE BARRIER, PLACED OUTSIDE THE DRIPLINE. THE TREE PROTECTION FENCING SHALL BE MONITORED BY THE TOWNSHIP AND MAINTAINED BY THE APPLICANT WHILE IN PLACE. IT SHALL BE REMOVED AFTER ALL EARTHMOVING AND CONSTRUCTION ACTIVITIES ARE COMPLETED, BUT PRIOR TO LANDSCAPING IN THE VICINITY OF THE PRESERVED NATURAL FEATURES. (§62-56.D.5.A.1)
II. THE AREA AROUND THE BASE OF EXISTING TREES SHALL BE LEFT OPEN, EXCEPT IN THE CASE OF APPROVED TREE WELLS AND RETAINING WALLS. NO IMPERVIOUS COVER, STORAGE OF EQUIPMENT, MATERIALS, DEBRIS OR FILL SHALL BE ALLOWED TO REMAIN WITHIN THE DRIPLINE OF ANY EXISTING TREE OR WITHIN FOUR FEET OF EXISTING SHRUBS. (§62-56.D.5.A.2)
III. HEAVY-EQUIPMENT OPERATORS SHALL NOT DAMAGE EXISTING TREE TRUNKS AND ROOT SYSTEMS BY DRIVING VEHICLES OVER THE ROOT ZONE OF ANY TREE TO BE PRESERVED. IF THERE IS NO ALTERNATIVE TO LOCATING A UTILITY LINE WITHIN THE DRIPLINE, IT IS STRONGLY ENCOURAGED THAT TUNNELING, RATHER THAN TRENCHING, BE USED TO MINIMIZE POTENTIAL DAMAGE TO TREE ROOT SYSTEMS. IN SUCH CASES, THE TOWNSHIP SHALL DETERMINE THE MOST DESIRABLE LOCATION OF THE UTILITY FOR THE SURVIVAL OF THE TREE(S). WHERE TRENCHING IS UNAVOIDABLE, TRENCHED HOLES SHALL BE FILLED WITH TOPSOIL AS SOON AS POSSIBLE AND TAMPED LIGHTLY TO AVOID THE CREATION OF AIR SPACES. (§62-56.D.5.A.3)
IV. ANY DAMAGED TREE TRUNKS AND EXPOSED ROOTS SHALL BE TREATED ACCORDING TO THE NATURE OF THE INJURY. WHEN DIRECTED BY THE TOWNSHIP, ADDITIONAL TREATMENT METHODS MAY BE REQUIRED, INCLUDING LIQUID OR DRY FERTILIZER APPLICATION. (§62-56.D.5.A.4)
V. THE CROWN OF THE TREE SHALL BE SELECTIVELY THINNED TO COMPENSATE FOR ROOT LOSS OR DAMAGE DURING CONSTRUCTION, ACCORDING TO THE ANLA'S GUIDELINES, AND PRUNED ACCORDING TO THE NATIONAL ARBORISTS ASSOCIATION'S (NAA) PUBLICATION "A300 PRUNING STANDARD." (§62-56.D.5.A.5)
VI. TREES SHALL NOT BE USED FOR ROPING, CABLES, SIGNS, FENCING, OR LIGHTING. NAILS AND SPIKES SHALL NOT BE DRIVEN INTO TREES. (§62-56.D.5.A.6)
VII. GRADE CHANGES TO OCCUR AT ANY LOCATION ON THE PROPERTY SHALL NOT RESULT IN THE ALTERATION TO SOIL OR DRAINAGE CONDITIONS WHICH WOULD ADVERSELY AFFECT EXISTING VEGETATION TO BE RETAINED FOLLOWING SITE PREPARATION ACTIVITIES AND/OR SITE DISTURBANCE OF TREES, UNLESS ADEQUATE PROVISIONS ARE MADE TO PROTECT SUCH VEGETATION AND ITS ROOT SYSTEMS. (§62-56.D.5.A.7)

B. AT THE DISCRETION OF THE TOWNSHIP STAFF, A PRECONSTRUCTION MEETING WITH THE APPLICANT AND/OR SITE CONTRACTOR MAY BE REQUIRED, TO FURTHER DETERMINE METHODS TO MINIMIZE TREE LOSS. (§62-56.D.5.B)

C. THE TOWNSHIP MAY, AT ITS DISCRETION, REQUIRE THAT TREES AND SHRUBS WHICH WOULD OTHERWISE BE REMOVED DURING SITE PREPARATION ACTIVITIES BE TRANSPLANTED ELSEWHERE ON THE SITE, TO THE EXTENT FEASIBLE. (§62-56.D.5.C)

D. SHOULD ANY EXISTING TREES ON THE SITE NOT SCHEDULED TO BE REMOVED BE IRREPARABLY DAMAGED DURING SITE PREPARATION ACTIVITIES AND, AS A CONSEQUENCE THEREOF, DIE WITHIN TWO YEARS OF THE CONCLUSION OF SITE PREPARATION ACTIVITIES, SUCH TREES SHALL BE REPLACED WITH NURSERY-GROWN MATERIAL, IN ACCORDANCE WITHIN THE REQUIREMENT OF THIS SECTION. (§62-56.D.5.D)

E. TOPSOIL DISTURBED DURING THE COURSE OF CONSTRUCTION SHALL BE REDISTRIBUTED UPON THE SITE ON ALL REGRADED SURFACES SO AS TO PROVIDE AT LEAST SIX INCHES OF EVEN COVER TO ALL DISTURBED AREAS OF THE DEVELOPMENT AND SHALL BE STABILIZED BY SEEDING OR PLANTING. NO TOPSOIL SHALL BE REMOVED FROM THE SITE DURING CONSTRUCTION UNLESS APPROVED BY THE APPROPRIATE TOWNSHIP OFFICIALS. (§62-56.D.1)

F. ALL STUMPS AND OTHER TREE PARTS, LITTER, BRUSH, WEEDS, EXCESS OR SCRAP BUILDING MATERIALS, OR OTHER DEBRIS SHALL BE REMOVED FROM THE SITE AND DISPOSED OF IN ACCORDANCE WITH NEW JERSEY DEPARTMENT OF ENVIRONMENTAL PROTECTION AND ENERGY REGULATIONS. NO TREE STUMPS, PORTIONS OF TREE TRUNKS OR LIMBS SHALL BE BURIED ANYWHERE IN THE DEVELOPMENT. ALL DEAD OR DYING TREES, STANDING OR FALLEN, SHALL BE REMOVED FROM THE SITE, UNLESS THEY ARE WITHIN A WOODED AREA. IF TREES AND LIMBS ARE REDUCED TO CHIPS, THEY MAY, SUBJECT TO APPROVAL OF THE APPROPRIATE TOWNSHIP OFFICIAL, BE USED AS MULCH IN LANDSCAPED AREAS. HOWEVER, THE CHIPS MUST BE TREATED WITH A HIGH NITROGEN, LIQUID FERTILIZER AND/OR ALLOWED TO AGE PRIOR TO BEING USED IN A PLANTING BED. (§62-56.D.2)

G. A TREE SHALL BE CONSIDERED PRESERVED WHEN THE AREA UNDER THE DRIPLINE (ROOT ZONE) IS NOT DISTURBED, AND THE TREE IS IN A HEALTHY CONDITION AT THE END OF THE GUARANTEE PERIOD. DISTURBANCE INCLUDES EARTHMOVING ACTIVITIES AND THE CONSTRUCTION OF ALL PROPOSED IMPROVEMENTS AND UTILITIES. MAXIMUM EFFORT SHOULD BE MADE TO SAVE OR RELOCATE TREES WITHIN THE TREE PROTECTION ZONE, SPECIMEN TREES, PLANTS OF HIGH QUALITY AND/OR VALUE, AND PLANTS OF RARE OR UNUSUAL SPECIES. (§62-56.D.5)

TOWNSHIP OF VOORHEES:

A. MAXIMUM EFFORT SHALL BE MADE TO SAVE EXISTING PLANTINGS (BECAUSE OF SIZE OR RELATIVE RARITY). NO MATERIAL OR TEMPORARY SOIL DEPOSITS SHALL BE PLACED WITHIN FOUR FEET OF SHRUBS OR 10 FEET OF TREE DESIGNATED TO BE RETAINED. PROTECTIVE BARRIERS OR TREE WELLS SHALL BE INSTALLED AROUND EACH PLANT AND/OR GROUP OF PLANTS THAT ARE TO REMAIN ON THE SITE. SNOW FENCES AND SILT FENCES ARE EXAMPLES OF ACCEPTABLE BARRIERS. (§154.006.B.2)

B. NO TOPSOIL SHALL BE REMOVED FROM ANY SITE OR USED AS SUBSOIL. TOPSOIL REMOVED DURING THE COURSE OF CONSTRUCTION SHALL BE REDISTRIBUTED SO AS TO PROVIDE AT LEAST SIX INCHES OF COVER TO ALL AREAS AND SHALL BE STABILIZED BY SEEDING OR PLANTING. UNDER NO CIRCUMSTANCES SHALL ANY SOIL OR EARTH BE SOLD OR OTHERWISE REMOVED, UNLESS PURSUANT TO THE APPROVAL BY THE REVIEWING. (§154.006.C)

C. REMOVAL OF TREES HAVING A CALIPER OF FIVE INCHES OR GREATER AS MEASURED 36 INCHES ABOVE GROUND FROM ANY LOT IS PROHIBITED IN THE PROCESS OF GRADING OR INSTALLING IMPROVEMENTS. WHERE, IN THE JUDGMENT OF THE REVIEWING BOARD, SUCH REMOVAL IS UNAVOIDABLE AND CONSTRAINTS INCIDENT TO THE LAND ITSELF (INCLUDING, WITHOUT LIMITATION, EXTREME TOPOGRAPHY, UNSUITABLE SOILS, ROCK OUTCROPS AND EXISTING UNINTERRUPTED DENSE CANOPY) RENDER IT IMPRACTICAL TO LOCATE ON THE LOT THE REQUIRED NUMBER OF COMPENSATORY TREES, THEN, AT THE ELECTION OF THE REVIEWING BOARD, THE APPLICANT SHALL EITHER INSTALL A PORTION OF THE REQUIRED COMPENSATORY TREES ON OTHER PUBLIC LANDS WITHIN THE TOWNSHIP OR MAKE A CONTRIBUTION IN LIEU THEREOF IN ACCORDANCE WITH DIVISION (E)(4) OF THIS SECTION, SAID CONTRIBUTION TO BE BASED UPON THE ESTIMATED COST OF THOSE TREES WHICH CANNOT PRACTICALLY BE INSTALLED ON THE PROPERTY AS DETERMINED BY THE REVIEWING ENGINEER. (§154.006.E.1)

D. NOTWITHSTANDING THE FIVE INCH CALIPER LIMITATION SET FORTH ABOVE, NO SUBSTANTIAL AREA OF SMALLER TREES OR SHRUB COVER SHALL BE REMOVED WITHOUT THE PROVISION OF COMPARABLE REPLACEMENT AS APPROVED BY THE REVIEWING BOARD. THE SITE PLAN OR SUBDIVISION PLAN APPROVAL APPLICATIONS SHALL INCLUDE A TREE REMOVAL AND REPLACEMENT PLAN AND STATEMENT INDICATING THE TREES AND/OR MATERIAL TO BE REMOVED AND THE PLAN FOR COMPENSATORY REPLACEMENT PURSUANT TO §154.006(E). (§154.006.E.2)

E. THE FOLLOWING SHALL BE EXEMPT FROM THE REQUIREMENTS OF COMPENSATORY PLANTING:
i. TREES REMOVED DUE TO CLEARING FOR THE FOLLOWING:
1. ROAD, UTILITY AND PEDESTRIAN RIGHT-OF-WAYS; (§154.006.E.3.C.1)
2. AREAS WITHIN THE FOUNDATION LINES OF A PROPOSED BUILDING (§154.006.E.3.C.2)
3. AREAS WITHIN FRONT YARD AREAS REQUIRED FOR THE INSTALLATION OF UTILITY SERVICE LINES, ENTRY WALKS AND DRIVEWAYS. (§154.006.E.3.C.3)

Date	Comments	By
08/03/20	REV. PER TOWNSHIP ENGINEER & SEWER COMMENTS	RND

THIS PLAN SET IS FOR PERMITTING PURPOSES ONLY AND MAY NOT BE USED FOR CONSTRUCTION

DYNAMIC ENGINEERING
LAND DEVELOPMENT CONSULTING • PERMITTING • GEOTECHNICAL • ENVIRONMENTAL • SURVEY • PLANNING & ZONING
1904 Main Street, Lake Como, NJ 07719, T: 732.974.0198, F: 732.974.3521, www.dynamicec.com

TITLE: GENERAL NOTES

PROJECT: VOORHEES ROUTE 73 DEVELOPMENT GROUP, LLC
PROPOSED WAWA FOOD MARKET & FUELING STATION
BLOCK 36, LOT 11 & BLOCK 220, LOTS 9 & 16
NJSH ROUTE 73 AND KRESSON ROAD (CR 671)
TOWNSHIP OF EVESHAM (BURLINGTON COUNTY) & TOWNSHIP OF VOORHEES (CAMDEN COUNTY) NEW JERSEY

JOB No: 0744-12-010 | DATE: 12/10/19
DRAWN BY: KTK | SCALE: (H) NOT TO (V) SCALE
DESIGNED BY: MS
CHECKED BY: MAW

MATTHEW SHARO — PROFESSIONAL ENGINEER
MARK A. WHITAKER — PROFESSIONAL ENGINEER

SHEET No: 3 OF 35

NOTES

EPARED BASED ON REFERENCES INCLUDING:

/NSPS LAND TITLE SURVEY
ER CONSULTING, PA
J MIDLANTIC DRIVE, SUITE 100
NT LAUREL, NJ 08054
D 05/09/2019, LAST REVISED 07/15/2020
VEYOR FILE NO: 160015548

HEES ROUTE 73 DEVELOPMENT GROUP, LLC.
E. ROUTE 70
DING 1, SECOND FLOOR
TON, NJ 08053

K 36, LOT 11 (EVESHAM)
X 220, LOT 9 (VOORHEES)
W/J&J-VOORHEES I LLC
ROUTE 73 N, STE 101
TON, NJ 08053

K 220, LOT 16 (VOORHEES)
WALTER & BOBBI JEAN
KRESSON RD
HEES, NJ 08043

K 36, LOT 11 (EVESHAM) & BLOCK 220, LOTS 9 & 16 (VOORHEES)
ROUTE 73 & KRESSON ROAD (CR 671)
ISHIP OF EVESHAM & TOWNSHIP OF VOORHEES
INGTON & CAMDEN COUNTY, NJ

11: ZONE C-1 (COMMERCIAL 1 ZONE)
3: ZONE MB (MAJOR BUSINESS ZONE)
16: ZONE RR (RURAL RESIDENTIAL ZONE)

ENTIAL USE
SHIP OF VOORHESS: RR ZONE **(PERMITTED USE)** (§152.002.A)

ENIENCE STORE/RETAIL USE
SHIP OF EVESHAM: C-1 ZONE **(PERMITTED USE)** (§160-68.B.7)
SHIP OF VOORHEES: MB ZONE **(PERMITTED USE)** (§152.102.A)
SHIP OF VOORHEES: RR ZONE **(NON-PERMITTED USE)** (§152.102.A)
INE SERVICE STATION
SHIP OF EVESHAM: C-1 ZONE **(CONDITIONAL USE)** (§160-68.C.1)
SHIP OF VOORHEES: MB ZONE **(PERMITTED USE)** (§152.102.A)
SHIP OF VOORHEES: RR ZONE **(NON-PERMITTED USE)** (§152.102.A)

UIREMENTS (EVESHAM: §160-68.E & VOORHEES: §152.102 & 152.005)

	ZONE C-1	EXISTING	PROPOSED
	1 AC	0.68 AC (29,642 SF) (V)	0.68 AC (29,642 SF) (V)
	200 FT	328.8 FT	328.8 FT
	200 FT	328.8 FT	328.8 FT
	200 FT	56.2 FT (E)	56.2 FT (E)
CK (BORDERING RESIDENTIAL USE)	50 FT	N/A	N/A
CK (BORDERING NONRESIDENTIAL USE)	30 FT	N/A	91.4 FT
ACK	100 FT	N/A	81.3 FT (V)
CK	50 FT	N/A	0 FT (V)
	15%	N/A	4.8% (1,420 SF)
RAGE	55%	N/A	42.4% (12,572 SF)
	75%	N/A	54.7% (16,207 SF)
	40 FT	N/A	25.16 FT
I BUILDINGS	20 FT	N/A	N/A
FLOOR AREA	10,000 SF	N/A	1,420 SF (V)
)	0.15 [1]	N/A	0.05
R WIDTH (RESIDENTIAL USE)	40 FT	N/A	40 FT
ER BUFFER	15 FT	N/A	30.9 FT

/A: NOT APPLICABLE (E): EXISTING NON-CONFORMANCE (V): VARIANCE

AT EXCEEDS 0.15, BUT IN NO EVENT EXCEEDS 0.22, MAY BE DEVELOPED, SO LONG AS THE DEVELOPER CONTRIBUTES THE SUM OF $1 FOR EACH SQUARE HE TOWNSHIP CAPITAL FUND FOR THE BENEFIT OF LOW- AND MODERATE-INCOME HOUSING OR FOR TRAFFIC IMPROVEMENTS. (§160-68.E.7)

	ZONE RR	ZONE MB	EXISTING	PROPOSED
	1 AC	3 AC	3.48 AC	3.48 AC (151,668 SF)
	25 FT	300 FT	73 FT	73 FT (V)
	100 FT	N/S	73 FT (E)	73 FT (E)
CK	50 FT	N/A [2]	17 FT (E)	81.3 FT
X	30 FT	100 FT [1]	129 FT	140.1 FT
(	30 FT	50 FT	19 FT (E)	93.6 FT
	35 FT / 2.5 STORIES	35 FT	< 35 FT	33 FT
	30 FT	N/S	129 FT	N/A IN MB ZONE
AGE	45%	60% [3]	3%	42.5% (64,437 SF)
	70% [5]	N/S	N/A	58.2% (88,336 SF)
BUILDINGS	NS	25 FT	N/A	62.0 FT
FROM ROUTE 73	NS	50 FT [4]	N/A	60.9 FT
FROM RESIDENTIAL ZONE OR USE	NS	50 FT [4]	N/A	55.7 FT
NOT FROM ROUTE 73, A R TO A SIDE LOT LINE	NS	20 FT [4]	N/A	N/A
M RESIDENTIAL ZONE/USE)	50 FT	50 FT	328.8 FT	4.4 FT (V)
M COMMERCIAL/OFFICE	25 FT	25 FT	423.0 FT	4.4 FT (V)

: NOT APPLICABLE (E): EXISTING NON-CONFORMANCE (V): VARIANCE

AREA SHALL CONSIST OF A LANDSCAPE BUFFER CONSISTENT WITH §154.006 AND A 100-FOOT BUFFER SHALL BE A QUADRUPLING OF THE 25-FOOT BUFFER. ND BUFFER IS REQUIRED, A FIRE LANE AND A STORMWATER MANAGEMENT BASIN OR A PORTION THEROF MAY BE BUILT WITHIN THE FIRST 50 FEET OF THE **NCE – ACCESS DRIVE FROM KRESSON ROAD ENCROACHES ON BUFFER)**

ROUTE 73 SHALL BE 50 FT; HOWEVER, PROPOSED DEVELOPMENT DOES NOT FRONT ROUTE 73 WITHIN THE TOWNSHIP OF VOORHEES.

WER SERVICE (§152-102.B.2 & 152-102.C.2)

FOR ALL USES SHALL BE 50 FEET FROM ROUTE 73, 50 FEET FROM A RESIDENTIAL ZONE OR USE AND 20 FEET WHEN THE PARKING SETBACK IS NOT FROM NE OR USE OR TO A SIDE LOT LINE. IN THE CASE OF ADAPTIVE REUSE, EXISTING PARKING SETBACKS MAY CONTINUE TO BE UTILIZED WITHOUT THE NEED FOR T THE EXISTING PARKING SETBACKS ARE AT LEAST 75% OR GREATER OF THE PARKING SETBACKS ESTABLISHED HEREIN. IN SUCH AN EVENT, AN OPAQUE EQUIRED IN THE PARKING SETBACK AREA, IN THE DISCRETION OF THE REVIEWING BOARD, WHERE PARKING FACILITIES ARE PROPOSED WHICH ARE CONTIGUOUS ES WHICH SERVE EXISTING NON-RESIDENTIAL USES, THE PARKING SETBACK MAY BE REDUCED TO 15 FEET. THE PARKING SETBACKS MAY BE FURTHER E PARKING FACILITIES ARE INTERCONNECTED AND APPROPRIATE CROSS ACCESS EASEMENTS ARE PROVIDED. (§152-102.E)

THE LOT AREA SHALL BE CLEARED OF VEGETATION FOR THE PURPOSED OF CONSTRUCTION; PROVIDED HOWEVER, IF THE EXISTING CLEARED AREA EXCEEDS E EXISTING VEGETATION IS IMMATURE AND MAY BE RE-ESTABLISHED IN A RELATIVELY SHORT PERIOD OF TIME, COMPLIANCE WITH THIS SECTION MAY BE ARD TO PROMOTE THE PURPOSE OF THIS CHAPTER. (§152.005.H)

OURSELF
ATORS, DESIGNERS, OR ANY PERSON
URFACE ANYWHERE IN ANY STATE
elow
you dig.

TOWNSHIP OF EVESHAM:

9. CONDITIONAL USE REQUIREMENTS – GASOLINE SERVICE STATIONS
   - A. THE MINIMUM LOT SIZE FOR SERVICE STATIONS SHALL BE 20,000 SQUARE FEET, AND THE MINIMUM FRONTAGE SHALL BE 150 FEET. (§161-1.C.4.A) **(COMPLIES)**
   - B. NO SERVICE STATION/AUTO REPAIR SHOP SHALL BE LOCATED WITHIN 500 FEET OF ANY FIRE HOUSE, SCHOOL, PLAYGROUND, CHURCH, HOSPITAL, PUBLIC BUILDING OR INSTITUTION OR WITHIN 2,000 FEET FROM AN EXISTING SERVICE STATION. (§161-1.C.4.B) **(VARIANCE – SERVICE STATION LOCATED CLOSER THAN 500 FEET TO VETERINARY HOSPITAL AND SCHOOL)**
   - C. ALL APPLIANCES, PITS, STORAGE AREAS AND TRASH FACILITIES, OTHER THAN GASOLINE FILLING PUMPS OR AIR PUMPS, SHALL BE WITHIN A BUILDING. GASOLINE FILLING PUMPS AND AIR PUMPS SHALL BE PERMITTED WITHIN THE REQUIRED FRONT YARD SPACE OF SERVICE STATIONS BUT SHALL BE NO CLOSER THAN 50 FEET TO ANY RIGHT-OF-WAY LINE. CANOPIES DESIGNED TO PROTECT THE PUMPING AREA MAY BE LOCATED WITHIN 40 FEET OF ANY RIGHT-OF-WAY LINE. ALL LUBRICATION, REPAIR OR SIMILAR ACTIVITIES SHALL BE PERFORMED IN A FULLY ENCLOSED BUILDING, AND NO DISMANTLED PARTS SHALL BE DISPLAYED OUTSIDE OF AN ENCLOSED BUILDING. (§161-1.C.4.C) **(COMPLIES)**
   - D. NO JUNKED MOTOR VEHICLE OR PART THEREOF, OR MOTOR VEHICLES INCAPABLE OF NORMAL OPERATION UPON THE HIGHWAY, SHALL BE PERMITTED ON THE PREMISES OF ANY SERVICE STATION. IF MORE THAN THREE MOTOR VEHICLES INCAPABLE OF OPERATION SHALL BE LOCATED AT ANY ONE TIME UPON THE EXTERIOR PREMISES EXCEPT, HOWEVER, THAT NOT MORE THAN SIX MOTOR VEHICLES MAY BE LOCATED UPON ANY SERVICE STATION PREMISES OUTSIDE A CLOSED OR ROOFED BUILDING FOR A PERIOD OF TIME NOT TO EXCEED SEVEN DAYS, PROVIDING THAT THE OWNERS OF SAID MOTOR VEHICLES ARE AWAITING THEIR REPAIR OR DISPOSITION. (§161-1.C.4.D) **(NOT APPLICABLE)**
   - E. LANDSCAPING SHALL BE PROVIDED IN THE FRONT YARD AREA EQUAL TO AT LEAST 25% OF THE FRONT YARD AREA, AND SUCH LANDSCAPING SHALL BE REASONABLY DISTRIBUTED THROUGHOUT THE ENTIRE FRONT YARD AREA. (§161-1.C.4.E) **(COMPLIES)**
   - F. THE EXTERIOR DISPLAY AND PARKING OF MOTOR VEHICLES, TRAILERS, BOATS OR OTHER SIMILAR EQUIPMENT FOR SALE SHALL NOT BE PERMITTED AS PART OF A SERVICE STATION. (§161-1.C.4.F) **(NOT APPLICABLE)**
   - G. SERVICE STATIONS SHALL PROVIDE ADEQUATE PARKING IN ACCORDANCE WITH CHAPTER 160, ZONING. (§161-1.C.4.G) **(COMPLIES)**
   - H. ANY SERVICE STATION WHICH INCLUDES A CONVENIENCE SHOP SELLING RETAIL GOODS SUCH AS BEVERAGES, PACKAGED FOOD GOODS OR SUNDRIES SHALL PROVIDE PARKING IN ACCORDANCE WITH CHAPTER 160, ZONING. SUCH PARKING SHALL NOT INTERFERE WITH AISLES OR LANES FOR SERVICING VEHICLES. THE BOARD SHALL CONSIDER DISTANCE TO ADJACENT RESIDENTIAL NEIGHBORHOODS AND THE SAFETY OF PEDESTRIANS FROM SUCH NEIGHBORHOODS TO THE SERVICE STATION. (§161-1.C.4.I) **(COMPLIES)**
   - I. ALL OTHER APPLICABLE REQUIREMENTS OF THIS CHAPTER MUST BE SATISFIED. (§161-1.C.4.J) **(VARIANCE – NOT ALL ZONING REQUIREMENTS ARE BEING COMPLIED WITH)**
   - J. CAR WASHES, VEHICLE RENTAL USES, PARKING FOR A FEE OR OTHER ACTIVITY SPECIFICALLY A PART OF THE OPERATION OF THE SERVICE STATION ARE PERMITTED. IN SUCH CASES, ALL OTHER STANDARDS OF THIS CHAPTER FOR THESE USES MUST BE MAINTAINED, IN PARTICULAR, PARKING, STACKING LANE LENGTH AND BUFFERING. (§161-1.C.4.K) **(NOT APPLICABLE)**

10. MULTIPLE PRINCIPAL BUILDINGS/USES
   - A. COMMERCIAL PROPERTIES MAY HAVE MORE THAN ONE FREESTANDING PRINCIPAL BUILDING ON ONE LOT, MORE THAN ONE PRINCIPAL PERMITTED CONDITIONAL USE ON ONE LOT, AND MORE THAN ONE PRINCIPAL PERMITTED CONDITIONAL USE IN A BUILDING, PROVIDED THAT THE PROPERTY AND BUILDINGS ARE UNDER COMMON OWNERSHIP, OR ALTERNATIVELY HAVE A COMMON MAINTENANCE AGREEMENT AND BLANKET CROSS-ACCESS AGREEMENTS AND THE BUILDINGS ARE PLANNED AND DESIGNED IN A COORDINATED MANNER WITH SHARED ACCESS DRIVES, SHARED OR COORDINATED SIGNAGE, SHARED PARKING, AND COMPLEMENTARY ARCHITECTURE. (§160-29.C) **(COMPLIES)**

11. PARKING REQUIREMENTS
   - A. NO PARKING IS PERMITTED WITHIN THE FIRST 50 FEET FROM THE RIGHT-OF-WAY WITHIN THE FRONT YARD SETBACK AREA. (§160-68.F.) **(COMPLIES)**
   - B. NO PARKING SPACES SHALL BE LOCATED IN ANY REQUIRED BUFFER OR SCREEN AREAS. (§160-32.B.2) **(COMPLIES)**
   - C. FRONT YARD PARKING SHALL BE SET BACK 100 FEET IN THE COMMERCIAL-1 ZONE. (§160-32.B.5) **(VARIANCE – PARKING PROPOSED 60.9 FEET FROM THE FRONT PROPERTY LINE)**
   - D. SIDE AND REAR YARD PARKING SHALL BE SETBACK 15 FEET IN THE COMMERCIAL-1 ZONE. (§160-32.B.6) **(COMPLIES)**
   - E. PARKING STALLS SHALL BE A MINIMUM SIZE OF NINE FEET BY 18 FEET. (§160-32.C.1) **(COMPLIES)**
   - F. OFF-STREET PARKING AREAS SHALL BE ORIENTED TO AND LOCATED WITHIN A REASONABLE WALKING DISTANCE OF THE BUILDINGS THEY ARE DESIGNED TO SERVE. OFF-STREET PARKING AREAS SHALL BE A MAXIMUM OF 1,000 FEET FROM THE BUILDING FOR EMPLOYEE PARKING. OFF-STREET PARKING AREAS SHALL BE A MAXIMUM OF 500 FEET TO 800 FEET FROM THE BUILDING FOR SHOPPERS. (§62-57.B.1) **(COMPLIES)**
   - G. PARKING CALCULATION (§160-32.A.3):
     SERVICE STATION (WITH CONVENIENCE STORE): 4 SPACES PER BAY AND WORK AREA PLUS 1 PER 125 SF OF CONVENIENCE STORE PLUS 1 PER EMPLOYEE

(0 BAYS)*(4 PARKING SPACES/BAY)	=	0 SPACES
(5,051 SF)*(1 PARKING SPACE/125 SF)	=	41 SPACES
(12 EMPLOYEES)*(1 PARKING SPACE/EMPLOYEE)	=	12 SPACES
REQUIRED	=	53 SPACES
PROPOSED	=	54 SPACES **(COMPLIES)**

12. LOADING REQUIREMENTS
   - A. SERVICE STATIONS WITH CONVENIENCE STORES SHALL HAVE A MINIMUM OF ONE (1) LOADING AREA. (§160-32.D.2) **(NOT APPLICABLE)**
   - B. NO LOADING AREA SHALL BE LOCATED IN ANY REQUIRED BUFFER OR SCREEN. (§160-32.D.3.A) **(NOT APPLICABLE)**
   - C. NO OFF-STREET LOADING AND MANEUVERING AREAS WILL BE LOCATED IN ANY FRONT YARD OR REQUIRE ANY PART OF A STREET. (§160-32.D.3.B) **(NOT APPLICABLE)**
   - D. LOADING SPACES SHALL BE LOCATED TO DIRECTLY SERVE THE BUILDING FOR WHICH THE SPACE IS BEING PROVIDED. (§160-32.D.3.C) **(NOT APPLICABLE)**
   - E. LOADING SPACES SHALL BE NO SMALLER THAN 10 FEET BY 35 FEET AND SHALL HAVE A MINIMUM CLEARANCE OF 14 FEET. (§160-32.D.4) **(NOT APPLICABLE)**

13. DRIVEWAY REQUIREMENTS
   - A. DRIVE AISLES FOR NINETY (90) DEGREE PARKING SPACES, SHALL BE TWENTY-FIVE (25) FEET. (§160-32.C.4) **(COMPLIES)**
   - B. DRIVEWAY WIDTHS SHALL BE AT LEAST 24 FEET (12 FEET ONE WAY) BUT NO MORE THAN 50 FEET IN WIDTH. (§160-32.E.1) **(COMPLIES)**
   - C. FOR NONRESIDENTIAL USES, NO DRIVEWAY EDGE OF PAVING SHALL BE LOCATED WITHIN 25 FEET OF A PROPERTY LINE. (§160-32.E.3) **(VARIANCE – 23.8' EDGE CLEARANCE PROPOSED)**
   - D. FOR NONRESIDENTIAL USES, NO DRIVEWAY EDGE OF PAVING SHALL BE LOCATED WITHIN 100 FEET OF AN INTERSECTION. (§160-32.E.4) **(COMPLIES)**
   - E. ACCESS POINTS FROM ANY ONE LOT CROSSING THE STREET LINE SHALL BE LIMITED TO A MAXIMUM OF TWO ALONG THE FRONTAGE OF ANY SINGLE STREET. THE CENTER LINES OF ANY SEPARATE ACCESS POINTS SHALL BE SPACED AT LEAST 65 FEET APART; SHALL HANDLE NO MORE THAN TWO LANES OF TRAFFIC; SHALL BE AT LEAST 20 FEET FROM ANY PROPERTY LINES; AND SHALL BE SET BACK FROM THE STREET LINE OF ANY INTERSECTING STREET AT LEAST 50 FEET OR 1/2 THE LOT FRONTAGE, WHICHEVER IS GREATER, EXCEPT THAT IN NO CASE NEED THE SETBACK DISTANCE EXCEED 200 FEET. CONTINUOUS OPEN DRIVEWAYS IN EXCESS OF 16 FEET AT THE STREET LINE SHALL BE PROHIBITED EXCEPT THAT TWO-WAY DRIVEWAYS SERVING NONRESIDENTIAL USES AND MULTIPLE-FAMILY DEVELOPMENTS SHALL BE AT LEAST 24 FEET WIDE. ONE-WAY DRIVEWAYS SHALL BE 15 FEET. IN ALL INSTANCES, DUE CONSIDERATION TO THE PROPOSED WIDTH, CURBING, DIRECTION OF TRAFFIC FLOW, RADII OF CURVES AND METHOD OF DIVIDING TRAFFIC LANES SHALL BE GIVEN. CURBING SHALL BE DEPRESSED AT THE DRIVEWAY, AND THE CURBING MAY BE ROUNDED AT THE CORNERS. (§62-57.F) **(COMPLIES)**

14. BUFFER REQUIREMENTS
   - A. BUFFERS AND SCREENS MAY BE COMPRISED OF EXISTING VEGETATION AND NATURAL FEATURES; PROPOSED NEW OR TRANSPLANTED VEGETATION; EXISTING OR PROPOSED FENCES, WALLS AND/OR BERMS. WHEN BERMS ARE INCLUDED IN A BUFFER, A CURVILINEAR OR NATURALISTIC ARRANGEMENT IS ENCOURAGED. (§160-17.C.1) **(COMPLIES)**
   - B. NO STRUCTURE, ACTIVITY, STORAGE OF MATERIALS OR PARKING OF VEHICLES SHALL BE PERMITTED WITHIN A BUFFER AREA. (§160-17.C.2) **(COMPLIES)**
   - C. THE LOCATION AND DESIGN OF BUFFERS AND SCREENS SHALL CONSIDER THE USE BEING BUFFERED OR SCREENED, THE DISTANCE BETWEEN THE USE AND THE PROPERTY LINE, DIFFERENCES IN ELEVATIONS, THE TYPES OF BUFFERS OR SCREENS, SUCH AS DENSE PLANTING, EXISTING WOODS, A WALL OR FENCE, BUFFER HEIGHT AND WIDTH AND OTHER COMBINATIONS OF MAN-MADE AND NATURAL FEATURES. THE BUFFER OR SCREEN SHALL BE DESIGNED, PLANTED, GRADED, LANDSCAPED AND DEVELOPED WITH THE GENERAL GUIDELINE THAT THE CLOSER A USE OR ACTIVITY IS TO THE PROPERTY LINE OR THE MORE INTENSE THE USE, THE MORE EFFECTIVE THE BUFFER OR SCREEN AREA MUST BE IN OBSCURING LIGHT AND VISION AND REDUCING NOISE BEYOND THE LOT. (§160-17.C.3) **(COMPLIES)**
   - D. A BUFFER LENGTH SHALL BE MEASURED AT THE PROPERTY LINE OR RIGHT-OF-WAY LINE, AND SHALL INCLUDE ALL EXISTING OR PROPOSED DRIVEWAY OPENINGS OR EASEMENTS. (§160-17.C.4.A) **(COMPLIES)**
   - E. WHERE BUFFER AREAS OVERLAP, AS IN THE CASE OF SIDE AND REAR TRACT BOUNDARIES, ONLY THE MORE STRINGENT BUFFER SHALL APPLY IN THE AREA OF OVERLAP. HOWEVER, CARE SHALL BE TAKEN TO AVOID UNPLANTED GAPS IN WHAT WOULD BE THE AREA OF OVERLAP. (§160-17.C.4.B) **(COMPLIES)**
   - F. THE LENGTH OF THE PERIMETER OF STORMWATER MANAGEMENT BASINS SHALL BE MEASURED ALONG THE CENTER OF THE BASIN'S RIM. (§160-17.C.4.C) **(COMPLIES)**
   - G. ALL BUFFER AND/OR SCREEN PLANTINGS ALONG STATE HIGHWAYS SHALL REQUIRE A BERM AS AN INTEGRAL PART OF THE LANDSCAPING. (§160-17.C.5) **(COMPLIES)**
   - H. AT LEAST 50% OF ALL SHADE TREES AND 25% OF THE SHRUBS SHALL BE NATIVE TO THE REGION. (§160-17.C.7) **(COMPLIES)**
   - I. AT LEAST 50% OF THE SHRUBS SHALL BE EVERGREEN. (§160-17.C.8) **(COMPLIES)**
   - J. UP TO 50% OF THE REQUIRED SHADE TREES MAY BE SUBSTITUTED WITH ORNAMENTAL TREES AT A RATIO OF TWO ORNAMENTAL TREES FOR EACH SHADE TREE. (§160-17.C.9) **(COMPLIES)**
   - K. UP TO 50% OF THE REQUIRED SHRUBS MAY BE SUBSTITUTED WITH ORNAMENTAL GRASSES, WHICH ATTAIN A MINIMUM HEIGHT OF THREE FEET. (§160-17.C.10) **(COMPLIES)**
   - L. A MINIMUM OF 50% OF THE BUFFER WIDTH MUST CONTAIN REQUIRED PLANTINGS. (§160-17.C.11) **(COMPLIES)**
   - M. PLANTS SHALL BE DISTRIBUTED THROUGHOUT THE ENTIRE LENGTH OF BUFFERS, BUT NEED NOT BE EVENLY SPACED. HOWEVER, THERE SHALL BE NO MORE THAN 100 FEET BETWEEN SHADE TREES, 50 FEET BETWEEN EVERGREEN TREES, AND 50 FEET BETWEEN SHRUB CLUSTERS. (§160-17.C.12) **(COMPLIES)**
   - N. BUFFER AND SCREEN PLANTINGS SHALL BE BROKEN AT POINTS OF VEHICULAR AND PEDESTRIAN ACCESS, OUTSIDE OF CLEAR SIGHT TRIANGLES. (§160-17.C.13) **(COMPLIES)**
   - O. THE REMAINDER OF THE BUFFER AREA SHALL BE PLANTED WITH GROUND COVERS, INCLUDING LAWN GRASSES OR MEADOW PLANTINGS, AS APPROPRIATE TO THE CHARACTER OF THE SITE AND ADJACENT LANDS. (§160-17.C.14) **(COMPLIES)**
   - P. SCREENING BUFFERS SHALL CONTAIN THE FOLLOWING QUANTITY OF PLANT MATERIAL PER 100 FEET OF BUFFER LENGTH: FOR BUFFERS UP TO 50 FEET IN WIDTH: TWO SHADE TREES, PLUS TWO EVERGREEN TREES, PLUS 20 SHRUBS. (§160-17.D.1.C) **(COMPLIES)**
   - Q. PERIMETER BUFFERS SHALL CONTAIN ONE SHADE TREE, PLUS TWO EVERGREEN TREES, PLUS 10 SHRUBS, PLUS EITHER 20 GROUND COVER SHRUBS OR 300 HERBACEOUS GROUND COVER PLANTS OR BULBS PER 100 FEET OF BUFFER LENGTH. UP TO 50% OF THE GROUND COVER SHRUBS MAY BE SUBSTITUTED WITH PERENNIALS, AT A RATE OF TWO PERENNIALS PER GROUND COVER SHRUB. (§160-17.D.3) **(COMPLIES)**
   - R. BASIN HEADWALL AND OTHER STRUCTURES SHALL BE SCREENED WITH REQUIRED PLANTINGS; HOWEVER, PLANTINGS SHALL NOT IMPEDE THE BASIN'S FUNCTION. (§160-17.D.5) **(COMPLIES)**
   - S. LOW SCREENS SHALL BE USED AROUND THE PERIMETERS OF ALL PARKING LOTS OR OTHER SIMILAR VEHICULAR USE AREAS, INCLUDING SERVICE STATIONS AND VEHICULAR STACKING LANES ASSOCIATED WITH A DRIVE-THROUGH, AND AROUND TRASH ENCLOSURES OR STORAGE BUILDINGS WHEN DECORATIVE WALLS, SUCH AS BRICK, LATTICEWORK OR SPLIT-FACE CONCRETE BLOCK, ARE PROPOSED. (§160-17.D.6.A) **(COMPLIES)**
   - T. HIGH SCREENS SHALL BE USED ADJACENT TO LOADING AREAS; AROUND TRASH ENCLOSURES AND STORAGE BUILDINGS, WHEN FENCING OR PLAN CONCRETE MASONRY UNITS ARE PROPOSED; AROUND TRANSFORMERS, MAINTAINING THE REQUIRED CLEAR DISTANCE; AROUND VEHICULAR STORAGE AREAS THAT ARE NOT USED AS PARKING LOTS OR SALES AREAS, REGARDLESS OF THE VEHICLE'S OPERATING CONDITION; AND AROUND UTILITY TOWER AND EQUIPMENT YARDS. (§160-17.D.6.B) **(COMPLIES)**
   - U. LOW SCREENS SHALL BE COMPRISED OF EVERGREEN OR DENSE DECIDUOUS SHRUBS, CAPABLE OF OBSCURING THE GLARE OF AUTOMOBILE HEADLIGHTS, SHALL BE EVENLY SPACED TO FORM A CONTINUOUS SCREEN OR HEDGE THROUGHOUT THE YEAR, AND SHALL BE A MINIMUM HEIGHT OF THREE FEET AT PLANTING. (§160-17.D.7) **(COMPLIES)**
   - V. HIGH SCREENS SHALL BE COMPRISED OF EITHER LARGE EVERGREEN SHRUBS, SPACED NO FARTHER THAN FOUR FEET ON CENTER, OR AS NEEDED TO FORM A CONTINUOUS SCREEN AT A HEIGHT OF SIX FEET AFTER FIVE YEARS' GROWTH OR EVERGREEN TREES SPACED 12 FEET ON CENTER, WITH EVERGREEN SHRUBS PLACED BETWEEN THE EVERGREEN TREES, NO FARTHER THAN THREE FEET ON CENTER. (§160-17.D.8.A) **(COMPLIES)**

15. FENCE REQUIREMENTS
   - A. FENCES SHALL BE NO CLOSER THAN ONE FOOT TO ANY ROAD, STREET AND/OR RIGHT-OF-WAY. (§160-22.C.1) **(NOT APPLICABLE)**
   - B. FENCES SHALL NOT BE LESS THAN FOUR FEET AND NOT MORE THAN SIX FEET IN HEIGHT. (§160-22.C.2) **(NOT APPLICABLE)**

16. REFUSE AND RECYCLING AREA REQUIREMENTS
   - A. ALL NONRESIDENTIAL USES SHALL PROVIDE AND UTILIZE OUTSIDE TRASH ENCLOSURES (DUMPSTERS) FOR THE ELIMINATION OF TRASH AND/OR GARBAGE. (§160-27.A) **(NOT APPLICABLE)**
   - B. ALL TRASH ENCLOSURES (EXCEPT FOR SINGLE-FAMILY RESIDENCES) SHALL BE LOCATED SO AS TO BE HIDDEN FROM THE VIEW OF PASSING MOTORISTS AND PEDESTRIAN TRAFFIC. (§160-27.B) **(NOT APPLICABLE)**
   - C. ALL TRASH DISPOSAL UNITS (EXCEPT FOR SINGLE-FAMILY RESIDENCES) SHALL BE ENCLOSED BY A DECORATIVE FENCE. (§160-27.C) **(NOT APPLICABLE)**
   - D. ALL TRASH DISPOSAL UNITS SHALL SEPARATE AND PROVIDE DISTINCT APPROVED CONTAINERS FOR RECYCLABLE AND NONRECYCLABLE TRASH. (§160-27.D) **(NOT APPLICABLE)**
   - E. EVERY NONRESIDENTIAL ACTIVITY SHALL PROVIDE AT LEAST ONE TRASH AND GARBAGE PICKUP LOCATION FOR EACH BUILDING, WHICH SHALL BE SEPARATED FROM THE PARKING SPACES BY EITHER A LOCATION WITHIN THE BUILDING OR A PICKUP LOCATION OUTSIDE THE BUILDING, WHICH SHALL BE A DURABLE, TOTALLY ENCLOSED CONTAINER LOCATED IN A MANNER TO BE OBSCURED FROM VIEW FROM PARKING AREAS, STREETS AND ADJACENT RESIDENTIAL USES OR ZONING DISTRICTS BY A FENCE, WALL, PLANTING OR COMBINATION OF THE THREE. IF LOCATED WITHIN THE BUILDING, THE DOORWAY MAY SERVE BOTH THE LOADING AND TRASH/GARBAGE FUNCTIONS AND, IF LOCATED OUTSIDE THE BUILDING, IT MAY BE LOCATED ADJACENT TO OR WITHIN THE GENERAL LOADING AREA(S), PROVIDED THE CONTAINER IN NO WAY INTERFERES WITH OR RESTRICTS LOADING AND UNLOADING FUNCTIONS. MOREOVER, IF LOCATED OUTSIDE THE BUILDING, THE CONTAINER SHALL BE SITUATED ON THE SAME HORIZONTAL PLANE AS THE DRIVEWAY PROVIDING ACCESS TO THE CONTAINER. (§62-57.C.2) **(NOT APPLICABLE)**

TOWNSHIP OF VOORHEES:

17. MULTIPLE PRINCIPAL BUILDINGS/USES
   - A. NON-RESIDENTIAL LOTS MAY CONTAIN MORE THAN ONE PERMITTED USE, SUBJECT TO ALL DEVELOPMENT AND USES ON A LOT MEETING THE AREA AND BULK STANDARDS OF THE APPLICABLE ZONING DISTRICT AND THE REQUIREMENTS OF CHAPTER 154 AND CHAPTER 156, AS APPLICABLE. (§150.07.K) **(VARIANCE – NOT ALL APPLICABLE STANDARDS ARE BEING COMPLIED WITH)**

18. PARKING REQUIREMENTS
   - A. PARKING SPACES FOR COMMERCIAL USES SHALL BE NINE (9) FEET WIDE AND EIGHTEEN (18) FEET DEEP WITH A CLEAR TWO (2) FEET OVERHANG. (§154.010.B.1.A) **(COMPLIES)**
   - B. PARKING CALCULATION (§150.16.A):
     RETAIL STORE: 1 SPACE PER 200 SF OF GFA
     SERVICE STATION, FUEL ONLY: 0.5 SPACES PER FILL AREA, PLUS 1 SPACE PER EMPLOYEE MAXIMUM SHIFT

(5,051 SF)*(1 PARKING SPACE/200 SF)	=	26 SPACES
(16 FILLING AREAS)*(0.5 PARKING SPACES/FILLING AREA)	=	8 SPACES
(12 EMPLOYEES)*(1 PARKING SPACE/EMPLOYEE)	=	12 SPACES
REQUIRED	=	46 SPACES
PROPOSED	=	54 SPACES **(COMPLIES)**

19. LOADING REQUIREMENTS
   - A. EVERY COMMERCIAL AND INDUSTRIAL USE, OR COMBINATION THEREOF, CONTAINING AT LEAST 5,000 GROSS SQUARE FEET OF FLOOR AREA SHALL PROVIDE AND PERMANENTLY MAINTAIN ADEQUATE SPACE FOR THE STANDING, LOADING AND UNLOADING OR MATERIAL OR MERCHANDISE. THE LOADING AREA SHALL BE SO DESIGNATED ON THE SITE PLAN AND SHALL NOT BE USED OR ANY OTHER PURPOSE. THE MINIMUM DIMENSIONS OF THE LOADING AREA SHALL NOT BE LESS THAN 12 FEET WIDE BY 35 FEET DEEP WITH A HEIGHT CLEARANCE OF 14 FEET. ONE SUCH LOADING AREA SHALL BE REQUIRED FOR EACH 20,000 GROSS SQUARE FEET OF FLOOR AREA OR PART THEREOF. (§154.010.B.10) **(COMPLIES)**
   - B. ALL LOADING AREAS SHALL BE LANDSCAPED AND SCREENED SUFFICIENTLY TO OBSCURE THE VIEW OF THE LOADING PLATFORM OR OTHER LOADING FACILITY FROM ANY PUBIC STREET, RESIDENTIAL USE OR ZONE AND THE FRONT YARDS OF ADJACENT COMMERCIAL OR INDUSTRIAL USE. SUCH SCREENING MAY CONSIST OF FENCING OR WALLS, AND SHALL BE IN CONFORMANCE WITH THE LANDSCAPING REQUIREMENTS OF THE TOWNSHIP CODE. (§154.010.B.7) **(COMPLIES)**

20. DRIVEWAY REQUIREMENTS
   - A. TWO-WAY DRIVE AISLES SHALL BE TWENTY-FOUR (24) FEET FOR PERPENDICULAR PARKING SPACES. (§154.010.B.2) **(COMPLIES)**
   - B. ENTRANCE DRIVES ON ROADS WITH LESS THAN 39 MPH SPEED LIMITS, SHALL BE TWENTY-FIVE (25) FEET FOR TWO-WAY DRIVEWAYS. (§154.010.B.2) **(COMPLIES)**
   - C. FOR SITES WITH BETWEEN 40 AND 99 PARKING SPACES, THE LENGTH OF THE MANUEVER-FREE DRIVE SHALL BE FORTY (40) FEET. (§154.010.B.3) **(COMPLIES)**
   - D. THE MINIMUM DISTANCE FROM ENTRANCE DRIVE TO INTERSECTING RIGHTS-OF-WAY WITH A STREET FRONTAGE OF LESS THAN 150 FEET (MEASURED FROM CENTER LINE TO RIGHT-OF-WAY) SHALL BE THIRTY-FIVE (35) FEET AND WITH A STREET FRONTAGE OF GREATER THAN 150 FEET (MEASURED FROM CENTER LINE TO RIGHT-OF-WAY) SHALL BE SEVENTY-FIVE (75) FEET. (§154.010.B.4) **(COMPLIES)**
   - E. ACCESS TO PARKING AREAS FROM PUBIC STREETS SHALL BE LIMITED TO ONE (1) PER STREET FRONTAGE UP TO A MAXIMUM OF TWO (2) PER SITE, WITH THE FOLLOWING EXCEPTIONS:
     - i. TWO (2) ENTRANCE DRIVES ON ONE (1) PUBLIC STREET SHALL BE PERMITTED FOR LOTS OR PREMISES WITH FRONTAGE IN EXCESS OF 300 FEET, UP TO A MAXIMUM OF THREE (3) PER SITE. (§154.010.B.5.A) **(COMPLIES)**
     - ii. GASOLINE SERVICE STATIONS SHALL BE PERMITTED TWO (2) ENTRANCE DRIVES ON ONE (1) PUBIC STREET, UP TO A MAXIMUM OF THREE (3) PER SITE, PROVIDED THAT THE CENTER LINES OF THE TWO (2) ENTRANCE DRIVES ON ONE (1) STREET FRONTAGE ARE NOT LESS THAN SIXTY (60) FEET APART. (§154.010.B.5.B) **(COMPLIES)**

21. BUFFER REQUIREMENTS
   - A. NO BUILDINGS, STRUCTURES, STORAGE OF MATERIALS, PARKING AREAS, ROADS OR DRIVE AISLES OR ANY OTHER IMPROVEMENTS SHALL BE PERMITTED WITHIN THE BUFFER AREAS; BUFFER AREAS SHALL BE MAINTAINED AND KEPT FREE OF ALL DEBRIS, RUBBISH, WEEDS, AND TALL GRASS. (§154.006.A.3) **(DESIGN WAIVER – DRIVE AISLE PROPOSED WITHIN BUFFER AREAS)**
   - B. BUFFER WIDTHS SHALL BE MEASURED HORIZONTALLY. THE DESIGN OF BUFFERS SHALL CONSIDER THE USE BEING BUFFERED, THE DISTANCE BETWEEN THE USE AND THE PROPERTY LINE, DIFFERENCES IN ELEVATION, THE TYPES OF BUFFERS AND SCREENS SUCH AS DENSE PLANTING, EXISTING WOODS, BUFFER HEIGHT AND WIDTH AND OTHER COMBINATIONS OF MAN-MADE AND NATURAL FEATURES. THE BUFFER SHALL BE DESIGNED, PLANTED, GRADED, LANDSCAPED AND DEVELOPED WITH THE GENERAL GUIDELINE THAT THE CLOSER A USE OR ACTIVITY IS TO THE PROPERTY LINE OR THE MORE INTENSE THE USE, THE MORE EFFECTIVE THE BUFFER AREA MUST BE IN OBSCURING LIGHT AND VISION AND REDUCING NOISE BEYOND THE LOT. THE TYPICAL 25-FOOT WIDE BUFFER SHALL BE COMPRISED OF THREE ROWS OF TREES AND/OR SHRUBS AS SPECIFIED PLANTED FIVE FEET ON CENTER. THE TYPICAL 50-FOOT WIDE BUFFER SHALL BE A DOUBLING OF THE 25-FOOT WIDE BUFFER. THE USE OF BERMS ARE ENCOURAGED AS APPROPRIATE, AND MAY BE REQUIRED. (§154.006.A.4) **(COMPLIES)**
   - C. ALL BUFFER AND OTHER LANDSCAPING AREAS SHALL BE PLANTED AND MAINTAINED WITH EITHER GRASS OR GROUND COVER, TOGETHER WITH TREES AND SHRUBS, AND THE FOLLOWING CRITERIA SHALL BE USED AS A GUIDELINE: (§154.006.A.5) **(COMPLIES)**
     - i. SHRUBS SHALL BE AT LEAST THREE FEET IN HEIGHT WHEN PLANTED AND BE OF SUCH DENSITY AS WILL OBSCURE, THROUGHOUT THE COURSE OF THE YEAR, THE GLARE OF HEADLIGHTS. DECIDUOUS TREES SHALL HAVE A MINIMUM CALIPER OF TWO AND ONE HALF TO THREE INCHES. EVERGREEN TREES SHALL BE AT LEAST FIVE FEET IN HEIGHT WHEN PLANTED. (§154.006.A.5.A) **(COMPLIES)**
     - ii. ANY PLANT MATERIAL WHICH DOES NOT LIVE SHALL BE REPLACED WITHIN 1 GROWING SEASON. (§154.006.A.5.B) **(COMPLIES)**
     - iii. BUFFER PLANTINGS AND LANDSCAPING SHALL OPEN AT POINTS OF VEHICULAR AND PEDESTRIAN ACCESS TO ASSURE A CLEAR SIGHT TRIANGLE. (§154.006.A.5.C) **(COMPLIES)**
   - D. IF THE AREA REQUIRED FOR ANY SETBACK, INCLUDING ALL BUFFER AREAS, ADJACENT TO A RESIDENTIALLY ZONED PROPERTY CONTAIN PRE-EXISTING NATURAL VEGETATION, TREES, SHRUBS OR OTHER BUFFER-TYPE MATERIALS, THE ENTIRE REQUIRED SETBACK AREA ADJACENT TO THE RESIDENTIALLY ZONED PROPERTY SHALL BE MAINTAINED, AS MUCH AS POSSIBLE, IN ITS NATURAL, PRE-EXISTING STATE. ANY DISTURBANCE OF SUCH AREA REQUIRED DURING CONSTRUCTION MUST BE RESTORED WITH THE PLANTING OF ADDITIONAL, SIMILAR TREES AND SHRUBS. (§154.006.A.6) **(COMPLIES)**
   - E. ALONG ROUTE 73, A BERM AND PLANTINGS ARE REQUIRED TO SCREEN PARKING FROM THE ROAD. THE MINIMUM TREE SIZE ALONG ROUTE 73 SHALL BE THREE AND ONE HALF TO 4 INCHES IN CALIPER, EITHER 50 FEET ON CENTER OR EQUIVALENT. (§154.006.B.1) **(NOT APPLICABLE)**

22. FENCE REQUIREMENTS
   - A. FENCES MAY BE ERECTED, ALTERED OR RECONSTRUCTED TO A HEIGHT NOT TO EXCEED FOUR FEET WHEN LOCATED FROM THE FRONT CORNERS OF ANY BUILDING TO THE SIDE PROPERTY LINE AND ALONG ANY SIDE PROPERTY LINE TO A POINT PARALLEL WITH THE REAR CORNER OF THE BUILDING. (§150.14.B.1.A.2) **(NOT APPLICABLE)**
   - B. FENCES MAY BE ERECTED, ALTERED OR RECONSTRUCTED TO A HEIGHT NOT TO EXCEED SIX FEET WHEN LOCATED IN THE REAR YARD OF AN INTERIOR LOT OR THE SIDE YARD FRONTING THE NON-PRIMARY STREET FOR CORNER LOTS. (§150.14.B.1.B.2) **(NOT APPLICABLE)**
   - C. OPEN OR SOLID FENCES MAY BE ERECTED, ALTERED OR RECONSTRUCTED TO A HEIGHT NOT TO EXCEED SIX FEET ALONG ANY REAR OR SIDE PROPERTY LINE OF A SINGLE-FAMILY RESIDENTIAL ZONE THAT ABUTS A NON-SINGLE-FAMILY RESIDENTIAL ZONE, PROVIDED THAT SUCH FENCE DOES NOT EXTEND INTO ANY FRONT YARD SETBACK AREA. (§150.14.B.1.C) **(NOT APPLICABLE)**
   - D. NO FENCE SHALL BE ERECTED, ALTERED OR RECONSTRUCTED FORWARD OF ANY BUILDING(S) IN THE FRONT YARD OR WITHIN THE REQUIRED FRONT YARD SETBACK APPLICABLE TO SUCH PROPERTY, WHICHEVER IS GREATER. (§150.14.B.2.A) **(NOT APPLICABLE)**
   - E. FOR THE PURPOSES OF THE CONSTRUCTION, ERECTION AND/OR LOCATION OF A FENCE ON LOTS THAT HAVE FRONTAGE ON MORE THAN ONE STREET, THE FRONT YARD SETBACK REQUIREMENT APPLICABLE IN THE ZONING DISTRICT WHERE THE LOT INVOLVED IS LOCATED IS THE REQUIRED SETBACK ON EACH STREET-FACING SIDE OF THE PROPERTY. (§150.14.B.2.C) **(NOT APPLICABLE)**
   - F. AT OR NEAR AN INTERSECTION OF TWO OR MORE STREETS, NO FENCE SHALL BE PERMITTED TO OBSTRUCT THE VIEW OF MOTORISTS TRAVELING ON EITHER INTERSECTING STREET. (§150.14.B.2.E) **(NOT APPLICABLE)**
   - G. ALL FENCES SHALL BE INSTALLED SO THAT RAILS AND POSTS SHALL BE FACING THE INSIDE OF THE OWNER'S PROPERTY. (§150.14.B.3.A) **(NOT APPLICABLE)**
   - H. NO FENCE SHALL CREATE AN ALLEY, PRIVATE WAY OR SETBACK FROM THE PROPERTY LINE OF LESS THAN FIVE FEET ON THE PROPERTY WHERE THE FENCE IS TO BE INSTALLED. (§150.14.B.3.B) **(NOT APPLICABLE)**
   - I. NO FENCE MAY BE ERECTED, ALTERED OR RECONSTRUCTED FORWARD OF ANY BUILDING IN THE FRONT YARD. (§150.14.C.2) **(NOT APPLICABLE)**
   - J. ALL FENCES SHALL BE SET BACK TO THE BUILDING SETBACK LINE UNLESS OTHERWISE INDICATED ON A FINAL SUBDIVISION OR SITE PLAN APPROVED BY THE REVIEWING BOARD. (§150.14.C.3) **(NOT APPLICABLE)**

23. REFUSE AND RECYCLING AREA REQUIREMENTS
   - A. TRASH AND RECYCLING AREAS SHALL BE ENCLOSED ON THREE SIDES BY MASONRY WALLS NOT LESS THAN SIX FEET NOR MORE THAN EIGHT FEET IN HEIGHT AND MUST BE COMPATIBLE WITH THE ARCHITECTURAL SCHEME OF THE DEVELOPMENT. (§154.006.D.1) **(COMPLIES)**
   - B. THE ENCLOSURE GATES SHALL BE CONSTRUCTED OF SOLID WELDED STEEL PANELS. (§154.006.D.2) **(COMPLIES)**
   - C. TRASH AND RECYCLING PICKUP SHALL ONLY BE PERMITTED BETWEEN THE HOURS OF 7:00 A.M. AND 10:00 P.M. (§154.006.D.4) **(COMPLIES)**

EVESHAM TOWNSHIP SIGNAGE REQUIREMENTS				
SIGN	REQUIREMENTS (§160-75)		PROPOSED	
FREESTANDING	MAXIMUM NUMBER OF SIGNS:	ONE (1) [3]	NUMBER OF SIGNS:	1
	MAXIMUM SIGN AREA:	80 SF [3]	SIGN AREA:	59.75 SF
	MAXIMUM SIGN HEIGHT:	20.25 FT [4]	SIGN HEIGHT:	20 FT
	MINIMUM SIGN SETBACK:	10 FT	SIGN SETBACK:	10 FT
	MINIMUM DISTANCE TO EXISTING FREESTANDING SIGN:	50 FT	DISTANCE TO EXISTING FREESTANDING SIGN:	104.4 FT
	MAXIMUM DISTANCE BETWEEN FACES:	18 IN	DISTANCE BETWEEN FACES:	22 IN (V)
	MAXIMUM PROJECTION:	3 IN	PROJECTION:	4.25 IN (V)
	MAXIMUM ITEMS OF INFORMATION:	THIRTEEN (13)	ITEMS OF INFORMATION:	FOUR (4)

N/S: NO STANDARD N/A: NOT APPLICABLE (E): EXISTING NON-CONFORMANCE (V): VARIANCE

[1] EXCEPT WHERE SPECIFICALLY PROHIBITED, ALL SIGNS MAY BE DOUBLE-FACED, AND THE MAXIMUM AREA RESTRICTIONS SHALL APPLY TO EACH SIDE OF THE SIGN. THE AREA OF THE SIGN SHALL INCLUDE EACH AND EVERY PART OF THE SIGN, INCLUDING MOLDINGS AND FRAMES. WHERE THE SIGN IS SUPPORTED BY A POST OR PYLON WHOSE SURFACE IS BEING USED FOR ADVERTISING PURPOSES, THE AREA OF THIS POST, PYLON OR OTHER SUPPORTING MEMBERS SHALL BE CONSIDERED AS PART OF THE TOTAL ALLOWABLE SIGN AREA. WHEREVER THE NAME OR ADVERTISING MESSAGE ON A SIGN IS DIVIDED BETWEEN A NUMBER OF PANELS OR PARTS, THE TOTAL AREA OF ALL OF THE PANELS OR PARTS SHALL BE CONSIDERED AS ONE SIGN, AND WHERE A SIGN CONSISTS OF INDIVIDUAL LETTERS OR NUMBERS, THE AREA OF THE SIGN SHALL BE CONSIDERED AS THE TOTAL AREA OF THE SMALLEST RECTANGLE OR RECTANGLES WHICH CAN COLLECTIVELY ENCLOSE ALL OF THE LETTERS OR NUMBERS. (§160-75.B.1.L)

[2] NONILLUMINATED OR INTERNALLY ILLUMINATED DIRECTIONAL SIGNS IDENTIFYING PARKING AREAS, LOADING ZONES, ENTRANCES, EXITS AND SIMILAR LOCATIONS. THE NUMBER OF DIRECTIONAL SIGNS SHALL NOT EXCEED THE NUMBER OF CURB CUTS ON A LOT. THE SIGNS MAY INCLUDE A BUSINESS NAME OR PROFESSIONAL NAME BUT SHALL NOT INCLUDE ANY ADVERTISING MESSAGE. IN SHOPPING CENTERS AND MULTITENANTED FACILITIES, INDIVIDUAL TENANTS SHALL NOT HAVE THEIR BUSINESS OR PROFESSIONAL NAMES ON THE DIRECTIONAL SIGNS. ONLY THE NAME OF SUCH CENTER OR DEVELOPMENT IS PERMITTED ON THE SIGN. SIGNS SHALL NOT EXCEED 2 1/2 SQUARE FEET IN AREA NOR 4 1/2 FEET IN HEIGHT. (§160-75.F.1)

[3] EACH PRINCIPAL COMMERCIAL BUILDING NOT PART OF A SHOPPING CENTER MAY HAVE ONE FREESTANDING AND ONE ATTACHED SIGN, EACH OF WHICH HAVING AN AREA NOT EXCEEDING 15% OF THE FRONT FACADE OF THE PRINCIPAL BUILDING OR 80 SQUARE FEET, WHICHEVER IS SMALLER. (§160-75.M.1.A) 0.15 * 82.7 FT * 22.5 FT = 279.11 SF

[4] NO PORTION OF THE TOP EDGE OF ANY FREESTANDING SIGN SHALL BE GREATER THAN 22 FEET ABOVE THE ELEVATION AT THE CENTER LINE OF THE STREET IN FRONT OF THE PROPERTY ON WHICH THE SIGN SHALL BE SITUATED. (§160-75.B.1.I) ELEVATION OF CENTER LINE (90.84) + 22 FT – ELEVATION OF SIGN BASE (92.59) = 20.25 FT

[5] SIGNS MAY BE ILLUMINATED. (§160-75.D)

[6] WHERE ILLUMINATED SIGNS ARE PERMITTED, SIGNS FACING A RESIDENCE OR RESIDENTIAL ZONE SHALL NOT BE ILLUMINATED BETWEEN THE HOURS OF 10:00 PM AND 7:00 AM THE FOLLOWING MORNING, UNLESS THE BUSINESS OR USES ADVERTISED ARE OPEN TO THE PUBLIC LATER THAN 10:00 PM, IN WHICH EVENT ANY SUCH ESTABLISHMENT MAY KEEP A SIGN ILLUMINATED UNTIL THE BUSINESS IS CLOSED TO THE PUBLIC BUT NOT THEREAFTER. (§160-78.D.4)

VOORHEES TOWNSHIP SIGNAGE REQUIREMENTS				
SIGN	REQUIREMENTS (§150.15)		PROPOSED	
FREESTANDING	NUMBER OF SIGNS:	ZERO (0)	NUMBER OF SIGNS:	ONE (1) (V)
	MAXIMUM SIGN AREA [1]:	41.35 SF [5]	SIGN AREA:	49.87 SF (V)
	MAXIMUM AREA OF PRICE SIGN:	12 SF	AREA OF PRICE SIGN:	17.69 SF (V)
	MAXIMUM SIGN HEIGHT:	20 FT	SIGN HEIGHT:	7.83 FT
	MINIMUM SIDE YARD SIGN SETBACK:	15 FT	SIGN SETBACK:	15 FT
	MINIMUM DISTANCE TO OTHER FREESTANDING SIGN:	50 FT	DISTANCE TO OTHER FREESTANDING SIGN:	554.5 FT
	MINIMUM CLEARANCE:	6 FT (OR SET BACK FROM ROW LINE 10 FT)	SIGN CLEARANCE:	15 FT
BUILDING MOUNTED	NUMBER OF FACADE SIGNS:	ONE (1) [4]	NUMBER OF SIGNS:	ONE (1)
	MAXIMUM FACADE SIGN AREA:	150 SF [7]	SIGN AREA:	67.7 SF
	MINIMUM CLEARANCE:	NS	SIGN CLEARANCE:	15.5 FT
	MAXIMUM HEIGHT:	22.5 FT [3]	HEIGHT:	+/- 21 FT
	MAX. PROJECTION:	2 FT	PROJECTION:	5 IN
CANOPY SPANNER	NUMBER OF SIGNS:	NS	NUMBER OF SIGNS:	TWO (2) (V)
	MAXIMUM SIGN AREA [1] [2]:	NS	SIGN AREA:	39.3 SF
CANOPY FAÇADE	NUMBER OF SIGNS:	NS	NUMBER OF SIGNS:	ONE (1) (V)
	MAXIMUM SIGN AREA [1] [2]:	NS	SIGN AREA:	9.03 SF

N/S: NO STANDARD N/A: NOT APPLICABLE (E): EXISTING NON-CONFORMANCE (V): VARIANCE

NOTES:

[1] THE SIZE OF ANY SIGN SHALL BE COMPUTED BY MULTIPLYING ITS GREATEST HEIGHT BY ITS GREATEST LENGTH, INCLUSIVE OF SUPPORTING STRUCTURES, UNLESS SUCH SUPPORTING STRUCTURE IS A POLE OR OTHER SIMILAR APPARATUS THAT ALLOWS CLEAR VIEW AROUND AND UNDER SUCH SIGN. TWO-SIDED FREESTANDING SIGNS CONTAINING THE SAME COPY ON BOTH SIDES SHALL BE MEASURED BY USING THE SURFACE AREA OF ONE SIDE OF THE SIGN ONLY. WHERE THERE IS DIFFERENT COPY ON EACH SIDE OF THE SIGN, EACH SIDE SHALL BE CONSIDERED A SEPARATE SIGN. (§150.15.E.9)

[2] WHEN THE NAME OR OTHER IDENTIFYING INFORMATION WITH RESPECT TO ANY ESTABLISHMENT, ENTERPRISE OR BUSINESS, EXCEPT FOR THE BUILDING NUMBER, STREET ADDRESS OR BUILDING NAME, IS LOCATED ON ANY AWNING OR CANOPY ATTACHED TO THE BUILDING IN WHICH THE ESTABLISHMENT, ENTERPRISE OR BUSINESS IS LOCATED, ONLY THE WORDING AND/OR LOGO INSTALLED, PAINTED OR PRINTED ON SUCH AWNING OR CANOPY SHALL BE CONSIDERED THE SIGN FOR NON-ILLUMINATED CANOPY OR AWNING SIGNS AND THE ENTIRE CANOPY OR AWNING SHALL BE CONSIDERED THE SIGN FOR ILLUMINATED CANOPY OR AWNING SIGNS. (§150.15.E.11)

[3] SIGNS ATTACHED TO THE FAÇADE OF A BUILDING OR STRUCTURE SHALL NOT EXTEND BEYOND THE HIGHEST POINT OF THE FAÇADE ON WHICH THEY ARE ERECTED. (§150.15.E.8.K)

[4] EACH COMMERCIAL (BUSINESS) ESTABLISHMENT MAY HAVE ONE SIGN ON OR ATTACHED TO THE FACADE OF THE ESTABLISHMENT ON EACH PUBLIC STREET FRONTAGE. (§150.15.H.2.a)

[5] EACH DEVELOPMENT WITH AT LEAST 100 FEET OF LOT FRONTAGE ON A COUNTY ROAD OR MUNICIPAL STREET MAY HAVE ONE FREESTANDING SIGN ON EACH PUBLIC STREET FRONTAGE, PROVIDED THAT SUCH SIGNS ARE NOT LARGER THAN ONE-HALF SQUARE FOOT OF SIGN PER LINEAR FOOT OF BUILDING FRONTAGE, WITH A MAXIMUM OF 75 SQUARE FEET OF AREA AND SHALL BE ERECTED WITHIN THE PROPERTY LINES OF THE DEVELOPMENT TO WHICH THEY RELATE.(§150.15.H.2.b) 0.5 SF PER LINEAR FOOT OF BUILDING FRONTAGE * 82.7 FT = 41.35 SF

[6] EACH DEVELOPMENT WITH AT LEAST 100 FEET OF STREET FRONTAGE ON A STATE HIGHWAY MAY HAVE ONE FREESTANDING SIGN ON THE STATE HIGHWAY (SUBJECT TO DEPARTMENT OF TRANSPORTATION APPROVAL, IF REQUIRED), PROVIDED THAT SUCH SIGN SHALL NOT BE LARGER THAN ONE-HALF SQUARE FOOT OF SIGN AREA PER LINEAR FOOT OF BUILDING FRONTAGE, WITH A MINIMUM OF 32 SQUARE FEET AND A MAXIMUM OF 75 SQUARE FEET OF AREA AND SHALL BE ERECTED WITHIN THE PROPERTY LINES OF THE DEVELOPMENT TO WHICH SUCH SIGN RELATES. (§150.15.H.2.d)

[7] EACH COMMERCIAL (BUSINESS) ESTABLISHMENT MAY HAVE ONE SIGN ON OR ATTACHED TO THE FACADE OF THE ESTABLISHMENT ON EACH PUBLIC STREET FRONTAGE. THE SIGN SHALL NOT EXCEED 15% OF THE FACADE AREA OF THE ESTABLISHMENT FACING THE STREET, INCLUDING WINDOW AND DOOR AREA ON WHICH THEY ARE DISPLAYED OR 150 SQUARE FEET, WHICHEVER IS SMALLER. 0.15 * 82.7 LF X 22.5 FT = 279.11 SF (§150.15.H.2.a)

Date	Comments	By
08/03/20	REV. PER TOWNSHIP ENGINEER & SEWER COMMENTS	RND

THIS PLAN SET IS FOR PERMITTING PURPOSES ONLY AND MAY NOT BE USED FOR CONSTRUCTION

DYNAMIC ENGINEERING
LAND DEVELOPMENT CONSULTING • PERMITTING • GEOTECHNICAL • ENVIRONMENTAL • SURVEY • PLANNING & ZONING

1904 Main Street
Lake Como, NJ 07719
T: 732.974.0198
F: 732.974.3521
www.dynamicec.com

Additional offices conveniently located at:
Chester, New Jersey T: 908.879.9229 | Toms River, New Jersey T: 732.974.0198 | Newtown, Pennsylvania T: 267.685.0276
Allen, Texas T: 972.534.2100 | Austin, Texas T: 512.646.2646 | Houston, Texas T: 281.789.6400
Delray Beach, Florida T: 561.921.8570

TITLE:
ZONING NOTES

PROJECT: VOORHEES ROUTE 73 DEVELOPMENT GROUP, LLC
PROPOSED WAWA FOOD MARKET & FUELING STATION
BLOCK 36, LOT 11 & BLOCK 220, LOTS 9 & 16
NJSH ROUTE 73 AND KRESSON ROAD (CR 671)
TOWNSHIP OF EVESHAM (BURLINGTON COUNTY) & TOWNSHIP OF VOORHEES (CAMDEN COUNTY) NEW JERSEY

Wawa

JOB No: 0744-12-010
DATE: 12/10/19
DRAWN BY: KTK
SCALE: (H) NOT TO (V) SCALE
DESIGNED BY: MS
CHECKED BY: MAW
SHEET No: 4 OF 35

MATTHEW SHARO
PROFESSIONAL ENGINEER

MARK A. WHITAKER
PROFESSIONAL ENGINEER

CONSTRUCTION CHECK – DATE
CONSTRUCTION CHECK – DATE

BURLINGTON COUNTY
TOWNSHIP OF
EVESHAM

CAMDEN COUNTY
TOWNSHIP OF
VOORHEES

OFFICE USE

C1 ZONE

MB ZONE

RR ZONE

RESIDENTIAL USE

RELIGIOUS USE

COMMERCIAL USE

NB ZONE

UNDEVELOPED

BLOCK 36, LOT 11
N/F VRI-W/J&J VOORHEES II, LLC
(CURRENT OWNER AS PER REALQUEST SEARCH
DB 9729, PG 1290)
GNZ, LLC (NOT CURRENT OWNER AS PER
TITLE REPORT DB 6255 PG 109 &
DB 7563, PG 634)

BLOCK 220, LOT 9
N/F VRI-W/J&J VOORHEES II, LLC
(CURRENT OWNER AS PER REALQUEST SEARCH
DB 9729, PG 1290)
GNZ, LLC (NOT CURRENT OWNER AS PER
TITLE REPORT DB 6255 PG 109 &
DB 7563, PG 634)

NJ STATE HIGHWAY ROUTE 73
(AKA MILFORD - WARTON ROAD)
(170 FEET WIDE - AS PER DEED)
(SPEED LIMIT - 55 MPH)

HADDONFIELD - KRESSON ROAD
(AKA COUNTY ROUTE 671)
(AKA HADDONFIELD - MILFORD ROAD)
(AKA KRESSON ROAD)
(VARIABLE WIDTH - AS PER DEED)
(SPEED LIMIT - 45 MPH)

MATCHLINE 'A'
MATCHLINE 'B'

DEMOLITION PLAN LEGEND

- PROPOSED LIMIT OF DISTURBANCE LINE
- TPF — TPF — PROPOSED TREE PROTECTION FENCE LINE
- EXISTING IMPROVEMENTS TO BE REMOVED UNLESS OTHERWISE NOTED
- TREES TO REMAIN
- TREES TO BE REMOVED
- TREES TO BE TRANSPLANTED/RELOCATED

SEE SHEET 3 OF 35 FOR DEMOLITION PLAN NOTES

GRAPHIC SCALE
-40 0 20 40 80 160
(IN FEET)
1 INCH = 40 FT.

THIS PLAN SET IS FOR PERMITTING PURPOSES ONLY AND MAY NOT BE USED FOR CONSTRUCTION

DYNAMIC ENGINEERING
LAND DEVELOPMENT CONSULTING • PERMITTING • GEOTECHNICAL • ENVIRONMENTAL • SURVEY • PLANNING & ZONING
1904 Main Street, Lake Como, NJ 07719 T: 732.974.0198 F: 732.974.3521 www.dynamicinc.com
Chester, New Jersey T: 908.879.9229 | Toms River, New Jersey T: 732.974.0198 | Newtown, Pennsylvania T: 267.685.0276
Allen, Texas T: 972.534.2100 | Austin, Texas T: 512.646.2646 | Houston, Texas T: 281.789.6400
Dallas Beach, Florida T: 561.921.8570

No.	Date	By	Comments
1	08/03/20	KTK	REV. PER TOWNSHIP ENGINEER & SEWER

TITLE: OVERALL DEMOLITION PLAN

PROJECT: VOORHEES ROUTE 73 DEVELOPMENT GROUP, LLC
PROPOSED WAWA FOOD MARKET & FUELING STATION
BLOCK 36, LOT 11 & BLOCK 220, LOTS 9 & 16
NJSH ROUTE 73 AND KRESSON ROAD (CR 671)
TOWNSHIP OF EVESHAM (BURLINGTON COUNTY) & TOWNSHIP OF VOORHEES (CAMDEN COUNTY) NEW JERSEY

JOB No: 0744-12-010
DATE: 12/10/19
DRAWN BY: KTK
SCALE: (H) 1"=40' (V)
DESIGNED BY: MS
CHECKED BY: MAW
SHEET No: 5 OF 35

MATTHEW SHARO — PROFESSIONAL ENGINEER
MARK A. WHITAKER — PROFESSIONAL ENGINEER

CONSTRUCTION CHECK — DATE
CONSTRUCTION CHECK — DATE

BURLINGTON COUNTY
TOWNSHIP OF EVESHAM

CAMDEN COUNTY
TOWNSHIP OF VOORHEES

C1 ZONE

C-1 ZONE

MB ZONE

RR ZONE

OFFICE USE

RESIDENTIAL USE

LIMIT OF DISTURBANCE

PROP. TREE PROTECTION FENCE

20' WIDE UTILITY EASEMENT TO BE DEDICATED TO THE TOWNSHIP OF VOORHEES AS PER PLAN REFERENCED IN NOTE 6E.
TO BE VACATED UPON APPROVAL

NJ STATE HIGHWAY ROUTE 73
(WAS MILFORD (SPEED LIMIT - MARLTON ROAD) (126 FEET WIDE - AS PER DEED)

R=5815.72'
L=323.10'
Δ=3° 10' 59"
CHB=S 0° 47' 00" E
CHD=323.06'

S 0°46'30" W
5.72'

S 88°51'54" E
331.75'

S 80°14'19" E
92.40'

N 0°38'54" E
398.33'

BENCHMARK #1
ELEV97.45
HUB & TACK SET

CONC. MONUMENT FOUND
'EVERS'
(HELD)

CAPPED REBAR FOUND 'FLOYD'

CAPPED REBAR FOUND

MATCHLINE 'A'

MATCHLINE 'B'

WOODED

GRASS

GRAPHIC SCALE
-20 0 10 20 40 80
(IN FEET)
1 INCH = 20 FT.

THIS PLAN SET IS FOR PERMITTING PURPOSES ONLY AND MAY NOT BE USED FOR CONSTRUCTION

No.	Date	Comments	By
	08/03/20	REV PER TOWNSHIP ENGINEER & SEWER COMMENTS	RND

DYNAMIC ENGINEERING
LAND DEVELOPMENT CONSULTING • PERMITTING • GEOTECHNICAL • ENVIRONMENTAL • SURVEY • PLANNING & ZONING
1904 Main Street, Lake Como, NJ 07719
T: 732.974.0198 F: 732.974.3521 www.dynamicsc.com
Additional offices conveniently located at:
Chester, New Jersey T: 908.879.9229 | Toms River, New Jersey T: 732.974.0198 | Newtown, Pennsylvania T: 267.685.0276
Allen, Texas T: 972.534.2100 | Austin, Texas T: 512.646.2648 | Houston, Texas T: 281.789.6400
Delray Beach, Florida T: 561.921.8570

TITLE: DEMOLITION PLAN 'A'

PROJECT: VOORHEES ROUTE 73 DEVELOPMENT GROUP, LLC
PROPOSED WAWA FOOD MARKET & FUELING STATION
BLOCK 36, LOT 11 & BLOCK 220, LOTS 9 & 16
NJSH ROUTE 73 AND KRESSON ROAD (CR 671)
TOWNSHIP OF EVESHAM (BURLINGTON COUNTY) & TOWNSHIP OF VOORHEES (CAMDEN COUNTY) NEW JERSEY

JOB No: 0744-12-010
DATE: 12/10/19
DRAWN BY: KTK
SCALE: (H) 1"=20' (V)
DESIGNED BY: MS
CHECKED BY: MAW
SHEET No: 6 OF 35

MATTHEW SHARO
PROFESSIONAL ENGINEER

MARK A. WHITAKER
PROFESSIONAL ENGINEER

CONSTRUCTION CHECK DATE
CONSTRUCTION CHECK DATE

MATCHLINE 'A'

MATCHLINE 'B'

RESIDENTIAL USE

MB ZONE

C1 ZONE

RESIDENTIAL USE

RR ZONE

LIMIT OF DISTURBANCE

OFFICE USE

RESIDENTIAL USE

COMMERCIAL USE

BURLINGTON COUNTY
TOWNSHIP OF EVESHAM

CAMDEN COUNTY
TOWNSHIP OF VOORHEES

(TRACT 2)

HADDONFIELD – KRESSON ROAD
(AKA COUNTY ROUTE 671)
(AKA HADDONFIELD – MILFORD ROAD)
(AKA KRESSON ROAD)
(AKA HADDONFIELD ROAD)
(VARIABLE WIDTH – AS PER DEED)
(SPEED LIMIT – 45 MPH)

GRAPHIC SCALE
-20 0 10 20 40 80
(IN FEET)
1 INCH = 20 FT.

THIS PLAN SET IS FOR PERMITTING PURPOSES ONLY AND MAY NOT BE USED FOR CONSTRUCTION

DYNAMIC ENGINEERING
LAND DEVELOPMENT CONSULTING • PERMITTING • GEOTECHNICAL • ENVIRONMENTAL • SURVEY • PLANNING & ZONING
1904 Main Street - Lake Como, NJ. 07719
T: 732.974.0198
F: 732.974.9521
www.dynamiceo.com
Additional offices conveniently located at:
Chester, New Jersey T: 908.879.9229 | Toms River, New Jersey T: 732.974.0198 | Newtown, Pennsylvania T: 267.685.0276
Allen, Texas T: 972.534.2100 | Austin, Texas T: 512.646.2646 | Houston, Texas T: 281.789.6400
Delray Beach, Florida T: 561.921.8570

TITLE: DEMOLITION PLAN 'B'

PROJECT: VOORHEES ROUTE 73 DEVELOPMENT GROUP, LLC
PROPOSED WAWA FOOD MARKET & FUELING STATION
BLOCK 36, LOT 11 & BLOCK 220, LOTS 9 & 16
NJSH ROUTE 73 AND KRESSON ROAD (CR 671)
TOWNSHIP OF EVESHAM (BURLINGTON COUNTY) & TOWNSHIP OF VOORHEES (CAMDEN COUNTY) NEW JERSEY

JOB No: 0744-12-010
DATE: 12/10/19
DRAWN BY: KTK
SCALE: (H) 1"=20' (V)
DESIGNED BY: MS
CHECKED BY: MAW
SHEET No: 7 OF 35

By	Comments	Date
RND	REV. PER TOWNSHIP ENGINEER & SEWER	08/03/20

MATTHEW SHARO
PROFESSIONAL ENGINEER

MARK A. WHITAKER
PROFESSIONAL ENGINEER

CONSTRUCTION CHECK _____ DATE _____
CONSTRUCTION CHECK _____ DATE _____

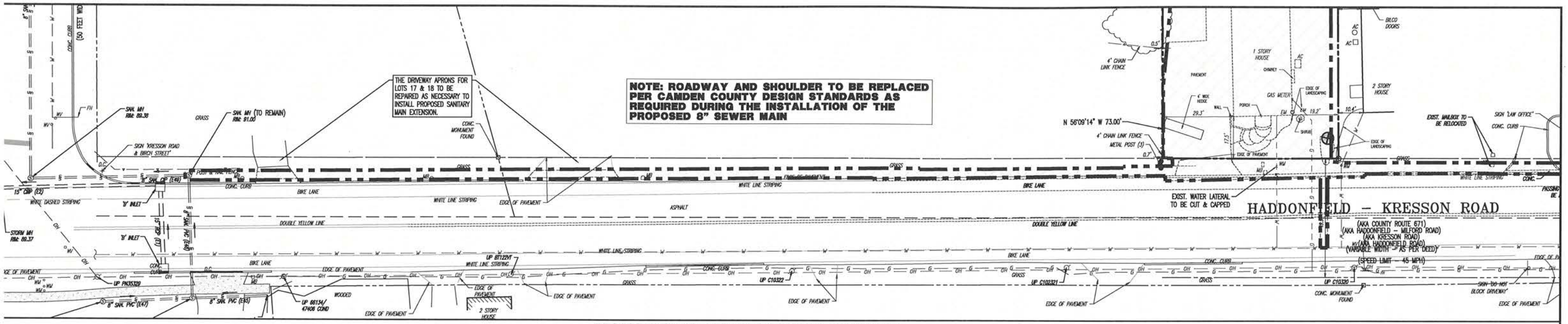

PROPOSED OFF-SITE SANITARY SEWER DEMOLITION

PROPOSED OFF-SITE STORMWATER CONNECTION DEMOLITION

GRAPHIC SCALE

-20 0 10 20 40 80

(IN FEET)

1 INCH = 20 FT.

THIS PLAN SET IS FOR PERMITTING PURPOSES ONLY AND MAY NOT BE USED FOR CONSTRUCTION

By	Date	Comments
MD	08/03/20	REV. PER TOWNSHIP ENGINEER & SEWER COMMENTS

DYNAMIC ENGINEERING
LAND DEVELOPMENT CONSULTING • PERMITTING • GEOTECHNICAL • ENVIRONMENTAL • SURVEY • PLANNING & ZONING
1904 Main Street - Lake Como, NJ 07719 T: 732.974.0198 F: 732.974.3521 www.dynamicenc.com
Additional offices conveniently located in: Chester, New Jersey T: 908.879.9229 | Toms River, New Jersey T: 732.974.0198 | Newtown, Pennsylvania T: 267.685.0276 Allen, Texas T: 972.534.2100 | Austin, Texas T:512.640.2646 | Houston, Texas T: 281.789.6400 Delray Beach, Florida T: 561.921.8570

TITLE: OFF-SITE DEMOLITION PLAN

PROJECT: **VOORHEES ROUTE 73 DEVELOPMENT GROUP, LLC**
PROPOSED WAWA FOOD MARKET & FUELING STATION
BLOCK 36, LOT 11 & BLOCK 220, LOTS 9 & 16
NJSH ROUTE 73 AND KRESSON ROAD (CR 671)
TOWNSHIP OF EVESHAM (BURLINGTON COUNTY) & TOWNSHIP OF VOORHEES (CAMDEN COUNTY) NEW JERSEY

JOB No:	0744-12-010
DATE:	12/10/19
DRAWN BY:	KTK
SCALE: (H) 1"=20' (V)	
DESIGNED BY:	MS
CHECKED BY:	MAW
SHEET No:	8 OF 35

MATTHEW SHARO — PROFESSIONAL ENGINEER
MARK A. WHITAKER — PROFESSIONAL ENGINEER

CONSTRUCTION CHECK — DATE
CONSTRUCTION CHECK — DATE

EVESHAM TOWNSHIP TREE REPLACEMENT CHART (§62-56.G)			
TYPE OF TREE TO BE REMOVED	RATIO OF REPLACEMENT TREES REQUIRED	TOTAL DIAMETER TO BE REPLACED (INCHES)	TOTAL NUMBER OF REPLACEMENT TREES REQUIRED
5" TO 23" IN DIAMETER	1 INCH OF NEW TREE CALIPER PER 1 INCH OF EXISTING TREE DIAMETER	444	148
GREATER THAN OR EQUAL TO 24" IN DIAMETER	2 INCHES OF NEW TREE CALIPER PER 1 INCH OF EXISTING TREE DIAMETER	(27" + 30" +30") X 2 = 174"	58
EXISTING STREET TREES WITHIN RIGHT-OF-WAY	1 TREE (WITH A CALIPER OF 3-3.5") WITHIN STREET TREE PLANTING STRIP PER TREE REMOVED	(14 TREES X 3") = 42"	14
OTHER SIGNIFICANT AREAS OF WOODS CONTAINING DECIDUOUS TREES SMALLER THAN 5" IN DIAMETER OR EVERGREENS LESS THAN 6' IN HEIGHT	1 SF OF NEW PLANTING AREA PER 1 SF OF AREA OF DISTURBANCE	N/A	N/A

(1) COMPENSATORY TREES SHALL BE THREE TO 3 1/2 INCHES IN CALIPER, AND PLANTED IN ACCORDANCE WITH THE STANDARDS CONTAINED WITHIN SUBSECTION C ABOVE. EVERGREEN AND ORNAMENTAL TREES MAY BE SUBSTITUTED AT A RATIO OF TWO TO ONE SHADE TREE, FOR UP TO 50% OF THE REQUIREMENT. ALTERNATIVE TYPES OF COMPENSATORY PLANTING MAY BE PERMITTED, WHEN APPROVED BY THE PLANNING BOARD. (§62-56.G.5) (COMPLIES)

EVESHAM TOWNSHIP TREES TO BE REMOVED INVENTORY	
NUMBER	SIZE (IN.)
1	6
2	8
3	27
4	12
5	6
6	6
7	6
8	6
9	10
10	10
11	10
12	6
13	6
14	6
15	6
16	6
17	6
18	6
19	6
20	6
21	6
22	6
23	10
24	10
25	10
26	10
27	8
28	8
29	8
30	6
31	8
32	10
33	6
34	8
35	8
36	8
37	15
38	18
39	8
40	30
41	10
42	6
43	6
44	20
45	20
46	8
47	15
48	10
49	8
50	12
51	12
52	8
53	6
54	8
55	6
56	6
57	12
58	12
59	6
60	8
61	10
62	8
63	8
64	30
65	6
66	6
TREES TO BE REMOVED (<5")	0
TREES TO BE REMOVED (5-23")	49
TREES TO BE REMOVED (>24")	3
TREES TO BE REMOVED WITHIN ROW	14

DEMOLITION PLAN LEGEND

- PROPOSED LIMIT OF DISTURBANCE LINE
- TPF TPF – PROPOSED TREE PROTECTION FENCE LINE
- EXISTING IMPROVEMENTS TO BE REMOVED UNLESS OTHERWISE NOTED
- TREES TO REMAIN
- TREES TO BE REMOVED
- TREES TO BE TRANSPLANTED/RELOCATED

GRAPHIC SCALE

-40 0 20 40 80 160

(IN FEET)
1 INCH = 40 FT.

THIS PLAN SET IS FOR PERMITTING PURPOSES ONLY AND MAY NOT BE USED FOR CONSTRUCTION

DYNAMIC ENGINEERING
LAND DEVELOPMENT CONSULTING • PERMITTING • GEOTECHNICAL • ENVIRONMENTAL • SURVEY • PLANNING & ZONING
1904 Main Street - Lake Como, NJ 07719 T: 732.974.0198 F: 732.974.3521 www.dynamicinc.com
Additional offices conveniently located at: Chester, New Jersey T: 908.879.9229 | Toms River, New Jersey T: 732.974.0198 | Newtown, Pennsylvania T: 267.685.0276 Allen, Texas T: 972.534.2100 | Austin, Texas T: 512.646.2648 | Houston, Texas T: 281.789.6400 Delray Beach, Florida T: 561.921.8570

TITLE: TREE PROTECTION MANAGEMENT PLAN

PROJECT: VOORHEES ROUTE 73 DEVELOPMENT GROUP, LLC
PROPOSED WAWA FOOD MARKET & FUELING STATION
BLOCK 36, LOT 11 & BLOCK 220, LOTS 9 & 16
NJSH ROUTE 73 AND KRESSON ROAD (CR 671)
TOWNSHIP OF EVESHAM (BURLINGTON COUNTY) & TOWNSHIP OF VOORHEES (CAMDEN COUNTY) NEW JERSEY

JOB No:	0744-12-010
DATE:	12/10/19
DRAWN BY:	KTK
SCALE: (H) 1"=40' (V)	
DESIGNED BY:	MS
CHECKED BY:	MAW
SHEET No:	9 OF 35

Date	Comments	By
08/03/20	REV. PER TOWNSHIP ENGINEER & SEWER COMMENTS	RND

MATTHEW SHARO — PROFESSIONAL ENGINEER
MARK A. WHITAKER — PROFESSIONAL ENGINEER

CONSTRUCTION CHECK — DATE
CONSTRUCTION CHECK — DATE

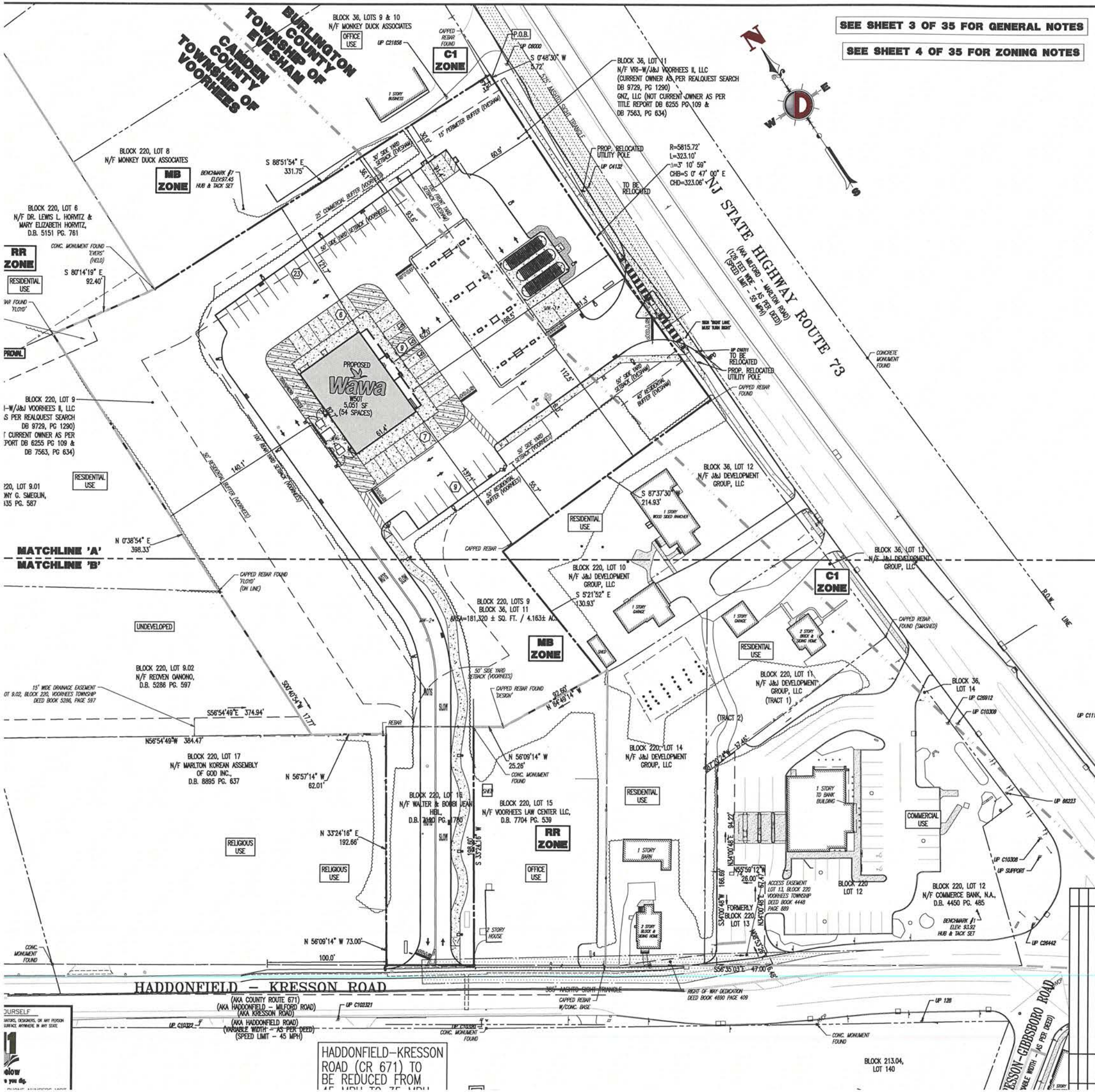

SEE SHEET 3 OF 35 FOR GENERAL NOTES

SEE SHEET 4 OF 35 FOR ZONING NOTES

BULK CHART - EVESHAM

EVESHAM TOWNSHIP:			
ZONE REQUIREMENT	ZONE C-1	EXISTING	PROPOSED
MINIMUM LOT AREA	1 AC	0.68 AC (29,642 SF) (V)	0.68 AC (29,642 SF) (V)
MINIMUM LOT FRONTAGE	200 FT	328.8 FT	328.8 FT
MINIMUM LOT WIDTH	200 FT	328.8 FT	328.8 FT
MINIMUM LOT DEPTH	200 FT	56.2 FT (E)	56.2 FT (E)
MINIMUM SIDE YARD SETBACK (BORDERING RESIDENTIAL USE)	50 FT	N/A	N/A
MINIMUM SIDE YARD SETBACK (BORDERING NONRESIDENTIAL USE)	30 FT	N/A	91.4 FT
MINIMUM FRONT YARD SETBACK	100 FT	N/A	81.3 FT (V)
MINIMUM REAR YARD SETBACK	50 FT	N/A	0 FT (V)
MAXIMUM BUILDING COVER	15%	N/A	4.8% (1,420 SF)
MAXIMUM IMPERVIOUS COVERAGE	55%	N/A	42.4% (12,572 SF)
CLEARING LIMIT	75%	N/A	54.7% (16,207 SF)
MAXIMUM BUILDING HEIGHT	40 FT	N/A	25.16 FT
MINIMUM DISTANCE BETWEEN BUILDINGS	20 FT	N/A	N/A
MINIMUM GROSS LEASABLE FLOOR AREA	10,000 SF	N/A	1,420 SF (V)
MAXIMUM FLOOR AREA RATIO	0.15 [1]	N/A	0.05
MINIMUM SCREENING BUFFER WIDTH (RESIDENTIAL USE)	40 FT	N/A	40 FT
MINIMUM REQUIRED PERIMETER BUFFER	15 FT	N/A	30.9 FT

N/S: NO STANDARD N/A: NOT APPLICABLE (E): EXISTING NON-CONFORMANCE (V): VARIANCE

NOTES:

[1] A FLOOR AREA RATIO THAT EXCEEDS 0.15, BUT IN NO EVENT EXCEEDS 0.22, MAY BE DEVELOPED, SO LONG AS THE DEVELOPER CONTRIBUTES THE SUM OF $1 FOR EACH SQUARE FOOT OF FLOOR AREA TO THE TOWNSHIP CAPITAL FUND FOR THE BENEFIT OF LOW- AND MODERATE-INCOME HOUSING OR FOR TRAFFIC IMPROVEMENTS. (§160-68.E.7)

BULK CHART - VOORHEES

VOORHEES TOWNSHIP:				
ZONE REQUIREMENT	ZONE RR	ZONE MB	EXISTING	PROPOSED
MINIMUM LOT AREA	1 AC	3 AC	3.48 AC	3.48 AC (151,668 SF)
MINIMUM LOT FRONTAGE	25 FT	300 FT	73 FT	73 FT (V)
MINIMUM LOT WIDTH	100 FT	N/S	73 FT (E)	73 FT (E)
MINIMUM FRONT YARD SETBACK	50 FT	N/A [2]	17 FT (E)	81.3 FT
MINIMUM REAR YARD SETBACK	30 FT	100 FT [1]	129 FT	140.1 FT
MINIMUM SIDE YARD SETBACK	30 FT	50 FT	19 FT (E)	93.6 FT
MAXIMUM BUILDING HEIGHT	35 FT / 2.5 STORIES	35 FT	< 35 FT	33 FT
MINIMUM BACKYARD AREA	30 FT	N/S	129 FT	N/A IN MB ZONE
MAXIMUM IMPERVIOUS COVERAGE	45%	60% [3]	3%	42.5% (64,437 SF)
MAXIMUM CLEARING LIMIT	70% [5]	N/S	N/A	58.2% (88,336 SF)
MINIMUM DISTANCE BETWEEN BUILDINGS	NS	25 FT	N/A	62.0 FT
MINIMUM PARKING SETBACK FROM ROUTE 73	NS	50 FT [4]	N/A	60.9 FT
MINIMUM PARKING SETBACK FROM RESIDENTIAL ZONE OR USE	NS	50 FT [4]	N/A	55.7 FT
MINIMUM PARKING SETBACK NOT FROM ROUTE 73, A RESIDENTIAL ZONE OR USE OR TO A SIDE LOT LINE	NS	20 FT [4]	N/A	N/A
MINIMUM BUFFER WIDTH (FROM RESIDENTIAL ZONE/USE)	50 FT	50 FT	328.8 FT	4.4 FT (V)
MINIMUM BUFFER WIDTH (FROM COMMERCIAL/OFFICE ZONE/USE)	25 FT	25 FT	423.0 FT	4.4 FT (V)

N/S: NO STANDARD N/A: NOT APPLICABLE (E): EXISTING NON-CONFORMANCE (V): VARIANCE

[1] THE ENTIRE REAR YARD AREA SHALL CONSIST OF A LANDSCAPE BUFFER CONSISTENT WITH §154.006 AND A 100-FOOT BUFFER SHALL BE A QUADRUPLING OF THE 25-FOOT BUFFER. WHERE A 100-FOOT REAR YARD BUFFER IS REQUIRED, A FIRE LANE AND A STORMWATER MANAGEMENT BASIN OR A PORTION THEREOF MAY BE BUILT WITHIN THE FIRST 50 FEET OF THE BUFFER. (§152-102.A) **(VARIANCE – ACCESS DRIVE FROM KRESSON ROAD ENCROACHES ON BUFFER)**

[2] FRONT YARD SETBACK TO ROUTE 73 SHALL BE 50 FT; HOWEVER, PROPOSED DEVELOPMENT DOES NOT FRONT ROUTE 73 WITHIN THE TOWNSHIP OF VOORHEES.

[3] FOR PROPERTIES WITH SEWER SERVICE (§152-102.B.2 & 152-102.C.2)

[4] THE PARKING SETBACKS FOR ALL USES SHALL BE 50 FEET FROM ROUTE 73, 50 FEET FROM A RESIDENTIAL ZONE OR USE AND 20 FEET WHEN THE PARKING SETBACK IS NOT FROM ROUTE 73, A RESIDENTIAL ZONE OR USE OR TO A SIDE LOT LINE. IN THE CASE OF ADAPTIVE REUSE, EXISTING PARKING SETBACKS MAY CONTINUE TO BE UTILIZED WITHOUT THE NEED FOR ZONING RELIEF PROVIDED THAT THE EXISTING PARKING SETBACKS ARE AT LEAST 75% OR GREATER OF THE PARKING SETBACKS ESTABLISHED HEREIN. IN SUCH AN EVENT, AN OPAQUE FENCE OR WALL SHALL BE REQUIRED IN THE PARKING SETBACK AREA. IN THE DISCRETION OF THE REVIEWING BOARD, WHERE PARKING FACILITIES ARE PROPOSED WHICH ARE CONTIGUOUS TO EXISTING PARKING FACILITIES WHICH SERVE EXISTING NON-RESIDENTIAL USES, THE PARKING SETBACK MAY BE REDUCED TO 15 FEET. THE PARKING SETBACKS MAY BE FURTHER REDUCED TO TEN FEET WHERE PARKING FACILITIES ARE INTERCONNECTED AND APPROPRIATE CROSS ACCESS EASEMENTS ARE PROVIDED. (§152-102.E)

[5] NO MORE THAN 70% OF THE LOT AREA SHALL BE CLEARED OF VEGETATION FOR THE PURPOSED OF CONSTRUCTION; PROVIDED HOWEVER, IF THE EXISTING CLEARED AREA EXCEEDS 70% OF THE LOT AREA OR THE EXISTING VEGETATION IS IMMATURE AND MAY BE RE-ESTABLISHED IN A RELATIVELY SHORT PERIOD OF TIME, COMPLIANCE WITH THIS SECTION MAY BE WAIVED BY THE REVIEWING BOARD TO PROMOTE THE PURPOSE OF THIS CHAPTER. (§152.005.H)

THIS PLAN SET IS FOR PERMITTING PURPOSES ONLY AND MAY NOT BE USED FOR CONSTRUCTION

No.	Date	Comments	By
1	08/03/20	REV. PER TOWNSHIP ENGINEER & SEWER COMMENTS	RND

DYNAMIC ENGINEERING
LAND DEVELOPMENT CONSULTING • PERMITTING • GEOTECHNICAL • ENVIRONMENTAL • SURVEY • PLANNING & ZONING
1904 Main Street, Lake Como, NJ 07719
T: 732.974.0198 F: 732.974.3521 www.dynamicec.com
Additional offices conveniently located in:
Chester, New Jersey T: 908.879.9229 | Toms River, New Jersey T: 732.974.0198 | Newtown, Pennsylvania T: 267.685.0276
Allen, Texas T: 972.534.2100 | Austin, Texas T:512.646.2646 | Houston, Texas T: 281.789.6400
Delray Beach, Florida T: 561.921.8570

TITLE: OVERALL SITE PLAN

PROJECT: VOORHEES ROUTE 73 DEVELOPMENT GROUP, LLC
PROPOSED WAWA FOOD MARKET & FUELING STATION
BLOCK 36, LOT 11 & BLOCK 220, LOTS 9 & 16
NJSH ROUTE 73 AND KRESSON ROAD (CR 671)
TOWNSHIP OF EVESHAM (BURLINGTON COUNTY) & TOWNSHIP OF VOORHEES (CAMDEN COUNTY) NEW JERSEY

JOB No:	0744-12-010
DATE:	12/10/19
DRAWN BY:	JHY
SCALE: (H) 1"=40' (V)	
DESIGNED BY:	MS
CHECKED BY:	MAW
SHEET No:	10 OF 35

MATTHEW SHARO, PROFESSIONAL ENGINEER
MARK A. WHITAKER, PROFESSIONAL ENGINEER
CONSTRUCTION CHECK DATE
CONSTRUCTION CHECK DATE

SEE SHEET 3 OF 35 FOR GENERAL NOTES

SEE SHEET 4 OF 35 FOR ZONING NOTES

BURLINGTON COUNTY
TOWNSHIP OF
EVESHAM

CAMDEN COUNTY
TOWNSHIP OF
VOORHEES

C1 ZONE

C-1 ZONE

MB ZONE

RR ZONE

BLOCK 36, LOTS 9 & 10
N/F MONKEY DUCK ASSOCIATES

OFFICE USE

BLOCK 36, LOT 11
N/F VRI-W/J&J VOORHEES II, LLC
(CURRENT OWNER AS PER REALQUEST SEARCH DB 9729, PG 1290)
GNZ, LLC (NOT CURRENT OWNER AS PER TITLE REPORT DB 8255 PG 109 & DB 7563, PG 634)

BLOCK 220, LOT 8
N/F MONKEY DUCK ASSOCIATES

BLOCK 220, LOT 9
N/F VRI-W/J&J VOORHEES II, LLC
(CURRENT OWNER AS PER REALQUEST SEARCH DB 9729, PG 1290)
GNZ, LLC (NOT CURRENT OWNER AS PER TITLE REPORT DB 8255 PG 109 & DB 7563, PG 634)

BLOCK 220, LOT 6
S L. HORVITZ &
BETH HORVITZ,
1 PG. 761

RESIDENTIAL USE

BLOCK 220, LOT 9.01
N/F ANTHONY G. SMEGLIN,
D.B. 9935 PG. 587

BLOCK 220, LOT 10
N/F J&J DEVELOPMENT GROUP, LLC

BLOCK 220, LOTS 9 AND 16
BLOCK 36, LOT 11
AREA=181,320 ± SQ. FT. / 4.163± AC.

PROPOSED Wawa
WSOT
5,051 SF
(54 SPACES)

PROP. 44" WAWA SIGN (67.7 SF)

PROP. ADA PARKING SIGNS

PROP. ADA PARKING (3 TYP.)

PROP. PROPANE KIOSK

PROP. NO IDLING SIGN

PROP. ICE CHEST

PROP. TYPE 'B' INLET (TYP.)

PROP. 8" LOADING ZONE CONC. PAD

PROP. GREASE TRAP

PROP. SANITARY MANHOLE (TYP.)

PROP. TRASH COMPOUND

PROP. 4" SIDEWALK CONC. PAD

PROP. 6" BOLLARD (TYP.)

PROP. BIKE RACK

PROP. CONC. FLUSH W/ PROP. ASPHALT (TYP.)

PROP. CONC. FLUSH W/ PROP. ASPHALT (TYP.)

PROP. STORM MANHOLE (TYP.)

APPROX. LIMITS OF R-TANK DETENTION BASIN

PROP. WHITE THERMOPLASTIC PAVEMENT MARKING (TYP.)

PROP. TREE LINE (TYP.)

PROP. ASPHALT PAVT

PROP. 6" PARKING CONC. PAD

PROP. 6" CONC. PAD

PROP. SPANNER SIGN (39.3 SF EA, 2 TYP.)

PROP. KIOSK (4 TYP.)

PROP. FUEL DISPENSER (8 TYP., 3+1)

PROP. FUELING CANOPY (55.0'X130.0') (7,150 SF)

PROP. WAWA CANOPY SIGN (9.03 SF)

PROP. CONC. ISLAND 355 SF

PROP. TANK FILLS (TYP.)

PROP. 8" CONC. PAD

PROP. 6'X6' VENT RISER CONC. PAD

PROP. TWO (2) 22K & (1) 20K FUEL STORAGE TANKS

PROP. WAWA P-50 SIGN (59.75 SF, 20' HIGH)

PROP. CONC. APRON (TYP.)

PROP. STOP BAR & STOP SIGN

PROP. RELOCATED UTILITY POLE

PROP. RELOCATED UTILITY POLE

PROP. 4" YELLOW PAVEMENT STRIPING (TYP.)

PROP. CONC. CURB (TYP.)

PROP. CONC. SIDEWALK (TYP.)

PROP. 'AIR PUMP PARKING ONLY' SIGN

PROP. AIR PUMP (2 TYP.)

PROP. 6" CONC. PAD

UP CB000

UP CB1858

UP CB1857 TO BE RELOCATED

UP CB1857 TO BE RELOCATED

POST

CAPPED REBAR FOUND

CAPPED REBAR FOUND

CAPPED REBAR FOUND 'FLOYD'

CONC. MONUMENT FOUND 'EVERS' (HELD)

BENCHMARK #1
ELEV97.45
HUB & TACK SET

S 12°48'30" W
5.72

S 88°51'54" E
331.75'

S 80°14'19" E
92.40'

N 0°38'54" E
398.33'

R=5815.72'
L=323.10'
Δ=3° 10' 59"
CHB=S 0° 47' 00" E
CHD=323.06'

20' WIDE UTILITY EASEMENT TO BE DEDICATED TO THE TOWNSHIP OF VOORHEES AS PER PLAN REFERENCED IN NOTE 6E.
TO BE VACATED UPON APPROVAL

SIGN 'RIGHT LANE MUST TURN RIGHT' TO BE RELOCATED

SIGN 'SAVE CORRIDOR'

575' ASHTO SIGHT TRIANGLE

171.0' EDGE CLEARANCE

23.0' EDGE CLEARANCE

134.0' REF. CONC. CURB

NJ STATE HIGHWAY ROUTE 73
(AKA MARLTON PIKE)
(SPEED LIMIT - MARLTON PIKE - 55 MPH)
(1126 FEET WIDE - AS PER DEED)

EDGE OF PAVEMENT

EDGE OF PAVEMENT

EDGE OF PAVEMENT

EDGE OF PAVEMENT

WHITE LINE STRIPING

YELLOW LINE STRIPING

DOUBLE WHITE LINE STRIPING

GRASS

GRASS

TREE LINE

TREE LINE

TREE LINE

FENCE

6' WOODEN FENCE

6' CHAIN LINK FENCE

0.6' FENCE

0.2' FENCE

MATCHLINE 'A'

MATCHLINE 'B'

GRAPHIC SCALE

(IN FEET)
1 INCH = 20 FT.

THIS PLAN SET IS FOR PERMITTING PURPOSES ONLY AND MAY NOT BE USED FOR CONSTRUCTION

DYNAMIC ENGINEERING
LAND DEVELOPMENT CONSULTING • PERMITTING • GEOTECHNICAL • ENVIRONMENTAL • SURVEY • PLANNING & ZONING
1904 Main Street, Lake Como, NJ 07719
T: 732.974.0198 F: 732.974.3521 www.dynamiceng.com
Additional offices conveniently located at:
Chester, New Jersey T: 908.879.9229 | Toms River, New Jersey T: 732.974.0198 | Newtown, Pennsylvania T: 267.685.0276
Allen, Texas T: 972.534.2100 | Austin, Texas T: 512.646.2646 | Houston, Texas T: 281.789.6400
Delray Beach, Florida T: 561.921.8570

TITLE: SITE PLAN 'A'

PROJECT: VOORHEES ROUTE 73 DEVELOPMENT GROUP, LLC
PROPOSED WAWA FOOD MARKET & FUELING STATION
BLOCK 36, LOT 11 & BLOCK 220, LOTS 9 & 16
NJSH ROUTE 73 AND KRESSON ROAD (CR 671)
TOWNSHIP OF EVESHAM (BURLINGTON COUNTY) & TOWNSHIP OF VOORHEES (CAMDEN COUNTY) NEW JERSEY

JOB No: 0744-12-010
DATE: 12/10/19
DRAWN BY: JHY
SCALE: (H) 1"=20' (V)
DESIGNED BY: MS
CHECKED BY: MAW
SHEET No: 11 OF 35

By	Comments	Date
RND	REV. PER TOWNSHIP ENGINEER & SEWER	08/03/20

MATTHEW SHARO
PROFESSIONAL ENGINEER

MARK A. WHITAKER
PROFESSIONAL ENGINEER

CONSTRUCTION CHECK DATE

CONSTRUCTION CHECK DATE

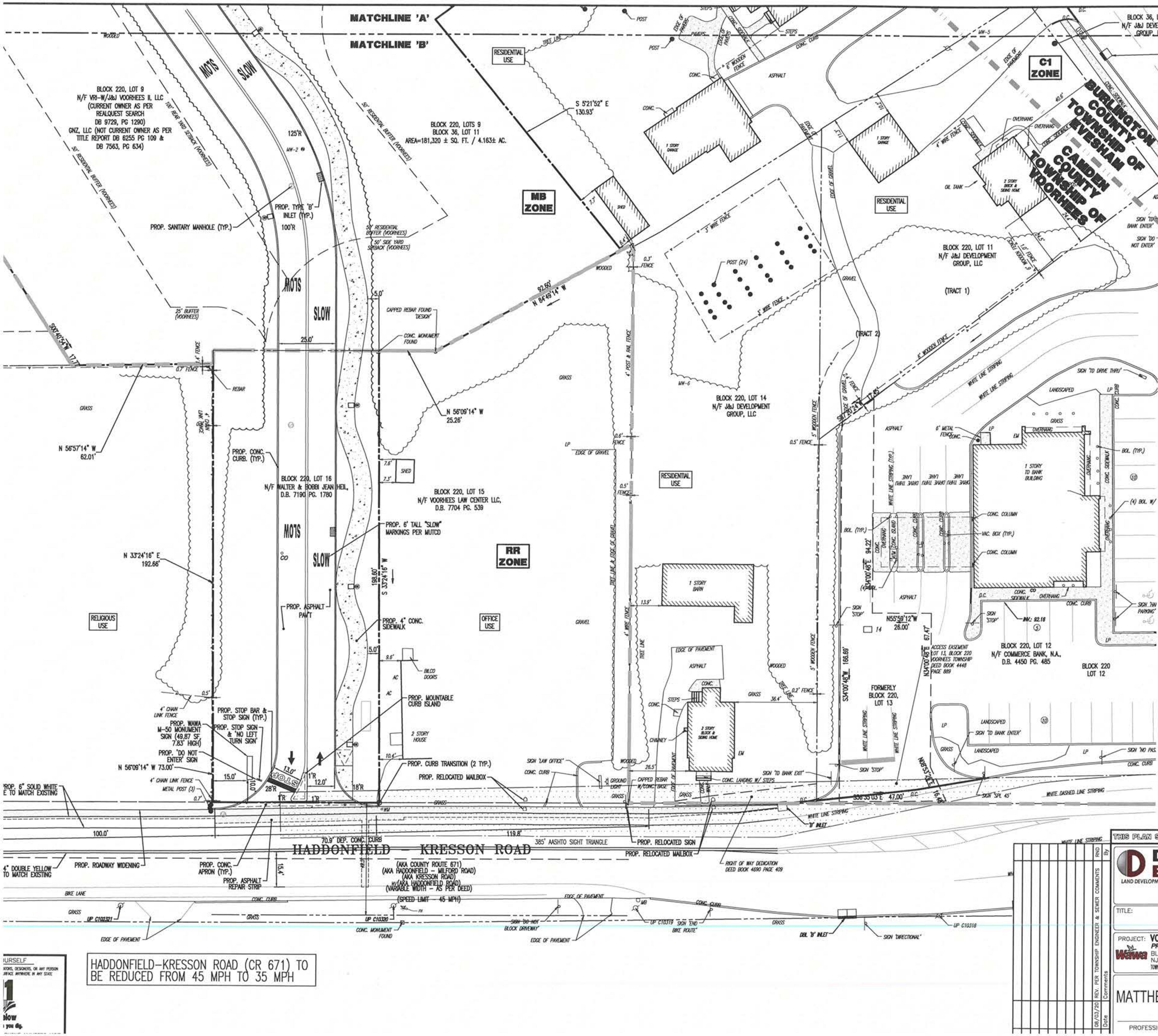

THIS PLAN SET IS FOR PERMITTING PURPOSES ONLY AND MAY NOT BE USED FOR CONSTRUCTION

Date	Comments	By
08/03/20	REV. PER TOWNSHIP ENGINEER & SEWER COMMENTS	RND

DYNAMIC ENGINEERING

LAND DEVELOPMENT CONSULTING • PERMITTING • GEOTECHNICAL • ENVIRONMENTAL • SURVEY • PLANNING & ZONING

1904 Main Street, Lake Como, NJ 07719, T: 732.974.0198, F: 732.974.3521, www.dynamicec.com

Additional offices conveniently located at: Chester, New Jersey T: 908.879.9229 | Toms River, New Jersey T: 732.974.0198 | Newtown, Pennsylvania T: 267.685.0276 | Allen, Texas T: 972.534.2100 | Austin, Texas T: 512.646.2646 | Houston, Texas T: 281.789.6400 | Delray Beach, Florida T: 561.921.8570

TITLE: SITE PLAN 'B'

PROJECT: **VOORHEES ROUTE 73 DEVELOPMENT GROUP, LLC**
PROPOSED WAWA FOOD MARKET & FUELING STATION
BLOCK 36, LOT 11 & BLOCK 220, LOTS 9 & 16
NJSH ROUTE 73 AND KRESSON ROAD (CR 671)
TOWNSHIP OF EVESHAM (BURLINGTON COUNTY) & TOWNSHIP OF VOORHEES (CAMDEN COUNTY) NEW JERSEY

JOB No: 0744-12-010 | DATE: 12/10/19
DRAWN BY: JHY | SCALE: (H) 1"=20' (V)
DESIGNED BY: MS
CHECKED BY: MAW

MATTHEW SHARO — PROFESSIONAL ENGINEER
MARK A. WHITAKER — PROFESSIONAL ENGINEER

CONSTRUCTION CHECK — DATE
CONSTRUCTION CHECK — DATE

SHEET No: 12 OF 35

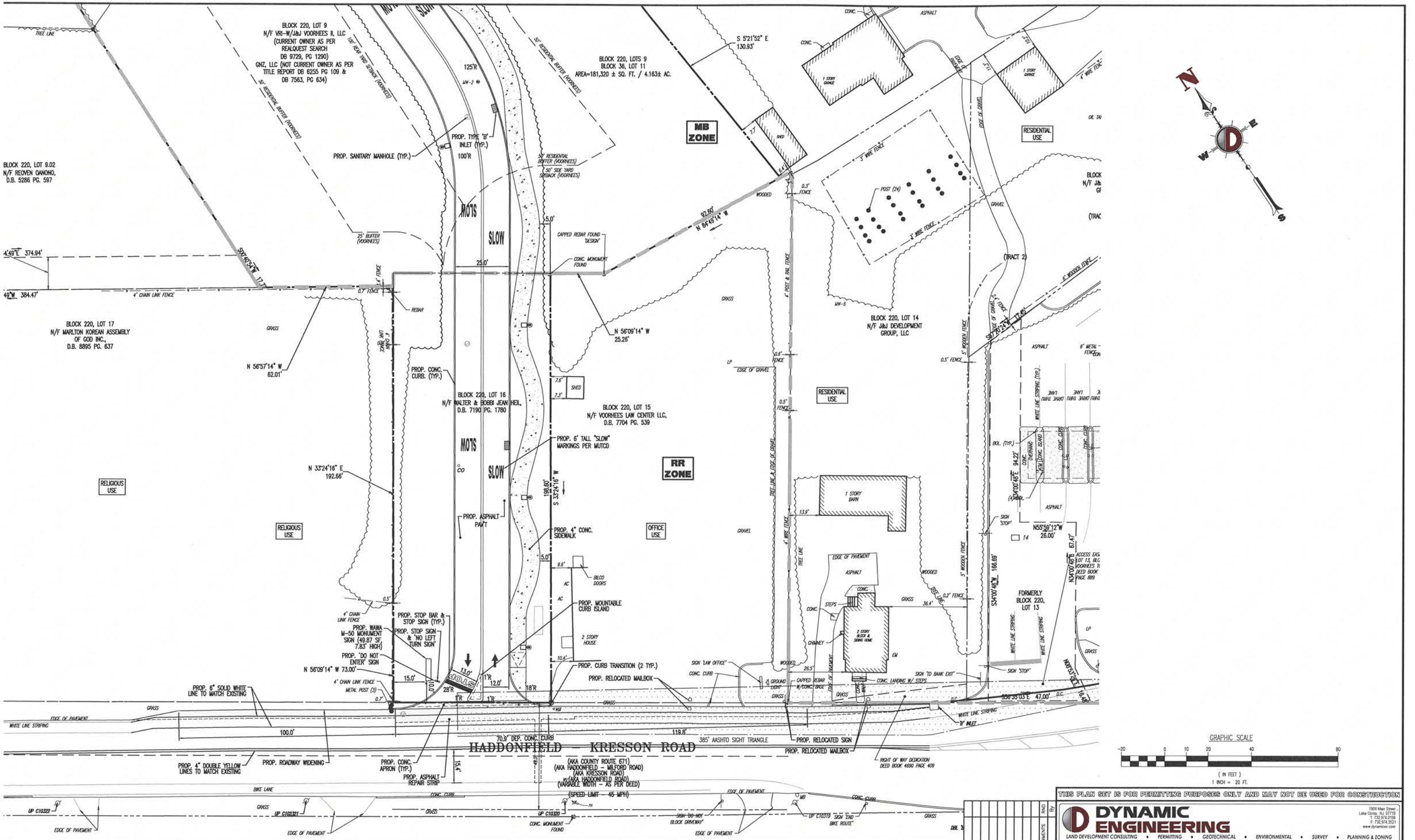

HADDONFIELD–KRESSON ROAD (CR 671) TO BE REDUCED FROM 45 MPH TO 35 MPH

GRAPHIC SCALE

-20 0 10 20 40 80

(IN FEET)
1 INCH = 20 FT.

THIS PLAN SET IS FOR PERMITTING PURPOSES ONLY AND MAY NOT BE USED FOR CONSTRUCTION

Date	Comments	REV. PER TOWNSHIP ENGINEER & SEWER COMMENTS	RHD By
08/03/20			

DYNAMIC ENGINEERING
LAND DEVELOPMENT CONSULTING • PERMITTING • GEOTECHNICAL • ENVIRONMENTAL • SURVEY • PLANNING & ZONING
1904 Main Street, Lake Como, NJ 07719 T: 732.974.0198 F: 732.974.3921 www.dynamicec.com
Additional offices conveniently located at:
Chester, New Jersey T: 908.879.9229 | Toms River, New Jersey T: 732.974.0198 | Newtown, Pennsylvania T: 267.685.0276
Allen, Texas T: 972.534.2100 | Austin, Texas T: 512.646.2644 | Houston, Texas T: 281.789.6400
Delray Beach, Florida T: 561.921.8370

TITLE: COUNTY ROADWAY IMPROVEMENTS

PROJECT: **VOORHEES ROUTE 73 DEVELOPMENT GROUP, LLC**
PROPOSED WAWA FOOD MARKET & FUELING STATION
BLOCK 36, LOT 11 & BLOCK 220, LOTS 9 & 16
NJSH ROUTE 73 AND KRESSON ROAD (CR 671)
TOWNSHIP OF EVESHAM (BURLINGTON COUNTY) & TOWNSHIP OF VOORHEES (CAMDEN COUNTY) NEW JERSEY

JOB No:	0744-12-010
DATE:	12/10/19
DRAWN BY:	KTK
SCALE: (H) 1"=20' (V)	
DESIGNED BY:	MS
CHECKED BY:	MAW
CONSTRUCTION CHECK	DATE
CONSTRUCTION CHECK	DATE
SHEET No:	13 OF 35

MATTHEW SHARO
PROFESSIONAL ENGINEER

MARK A. WHITAKER
PROFESSIONAL ENGINEER

GRADING/UTILITY GRAPHIC LEGEND

PROPERTY LINE (PARCEL IN QUESTION)
OFF-SITE PROPERTY LINES

- EXIST. CABLE LINE
- PROP. CABLE LINE
- EXIST. ELECTRIC LINE
- PROP. ELECTRIC LINE
- EXIST. FIBER OPTIC LINE
- PROP. FIBER OPTIC LINE
- EXIST. FUEL LINE
- PROP. FUEL LINE
- EXIST. OVERHEAD WIRES
- PROP. OVERHEAD WIRES
- EXIST. TELEPHONE LINE
- PROP. TELEPHONE LINE
- EXIST. UNDERGROUND ELEC./TELE. SERVICE (NO. & SIZE OF CONDUITS NOT DEFINED)
- PROP. UNDERGROUND ELEC./TELE. SERVICE (NO. & SIZE OF CONDUITS NOT DEFINED)
- EXIST. WATER LINE
- PROP. WATER LINE
- EXIST. SANITARY SEWER LINE
- PROP. SANITARY SEWER LINE
- EXIST. STORM DRAIN LINE
- PROP. STORM DRAIN LINE
- EXIST. MINOR CONTOUR & ELEVATION
- EXIST. MAJOR CONTOUR & ELEVATION
- PROP. FINISH GRADE CONTOUR & ELEVATION
- EXIST. MONITORING WELL
- APPROX. TEST PIT LOCATION
- EXIST. SPOT ELEVATIONS
- EXIST. GUTTER ELEV.
- EXIST. TOP OF CURB ELEV.
- EXIST. FINISH FLOOR ELEV.
- EXIST. GARAGE FLOOR ELEV.
- EXIST. FIRE HYDRANT
- EXIST. WATER VALVE
- EXIST. GAS VALVE
- EXIST. GAS METER
- EXIST. ELECTRIC METER
- EXIST. ELECTRIC BOX
- EXIST. CLEAN OUT
- EXIST. WELL
- EXIST. WATER SHUT OFF VALVE
- EXIST. TELEPHONE BOX
- EXIST. CABLE TV BOX
- EXIST. UTILITY POLE
- EXIST. GUY WIRE
- EXIST. LIGHT POLE
- EXIST. BUILDING LIGHT
- EXIST. SHOE BOX LIGHT
- EXIST. COBRA LIGHT POLE
- EXIST. TRAFFIC SIGNAL POLE
- EXIST. MANHOLE
- EXIST. "A" INLET
- EXIST. "B" INLET
- EXIST. "E" INLET
- EXIST. YARD INLET
- EXIST. FLARED END SECTION
- EXIST. HEADWALL
- G: 000.00 — PROP. GRADE SPOT ELEV.
- TC: 000.00 / G: 000.00 — PROP. TOP OF CURB & FINISHED GRADE ELEV.
- FF: 000.00 — PROP. FINISHED FLOOR ELEV.
- TW: 000.00 / G1: 000.00 — PROP. TOP OF WALL & FINISHED GRADE @ LOW SIDE OF WALL (ACTUAL BOTTOM OF WALL FOOTING TO BE ESTABLISHED BY WALL DESIGNER)
- TC: 000.00 / GH: 000.00 / G1: 000.00 — PROP. TOP OF EXTENDED CURB, (GH) FINISHED GRADE @ HIGH SIDE OF EXTENDED CURB & (G1) FINISHED GRADE @ LOW SIDE OF EXTENDED CURB
- PROP. DIRECTION OF DRAINAGE FLOW ARROW
- PROP. WATER VALVE
- PROP. GAS VALVE
- PROP. STORM CLEANOUT
- PROP. SANITARY CLEANOUT
- PROP. AREA LIGHT
- PROP. OUTLET CONTROL STRUCTURE
- PROP. DRAINAGE MANHOLE
- PROP. SANITARY SEWER MANHOLE
- PROP. 'A' INLET
- PROP. 'B' INLET
- PROP. 'E' INLET
- PROP. YARD INLET
- PROP. FLARED END SECTION
- PROP. HEADWALL

SEE SHEET 3 OF 35 FOR GRADING PLAN NOTES

NOTE: ANY IMPORTED FILL SHOULD BE CERTIFIED CLEAN.

C1 ZONE
C-1 ZONE
RR ZONE

BURLINGTON COUNTY
TOWNSHIP OF EVESHAM
CAMDEN COUNTY
TOWNSHIP OF VOORHEES

NJ STATE HIGHWAY ROUTE 73
(NAT MEDIAN (SPEED LIMIT - MARATON (55MPH))
(126 FEET WIDE - AS PER DEED)

SPP-1 SWHT: 86.00
SPP-2 SWHT: 87.00
SPP-3 SWHT: 88.00
SPP-4 SWHT: 86.50

PROP. TYPE 'B' INLET STORM STR. #1 TC: 93.35 GRT: 92.85 INV OUT (15"):89.85
PROP. TYPE 'B' INLET STORM STR. #3 TC: 95.65 GRT: 95.15 INV OUT (15"):92.28
PROP. TYPE 'B' INLET STORM STR. #5 TC: 95.70 GRT: 95.20 INV IN (15"): 91.76 INV OUT (15"):91.76
PROP. TYPE 'B' INLET STORM STR. #6 TC: 96.05 GRT: 95.55 INV IN (15"): 91.28 INV OUT (15"):91.28
PROP. TYPE 'B' INLET STORM STR. #7 TC: 96.00 GRT: 95.50 INV IN (15"): 90.74
PROP. TYPE 'B' INLET STORM STR. #14 TC: 95.57 GRT: 95.07 INV: 88.00
PROP. TYPE 'B' INLET STORM STR. #15 TC: 92.80 GRT: 92.30 INV OUT (15"):89.30

PROP. 4'ø SAN. MH SAN. STR. #42 RIM: 95.97 INV IN (6"): 91.38 INV OUT (8"): 90.48
PROP. 4'ø STORM MH STORM STR. #2 RIM: 93.28 INV IN (B): 89.64 INV IN (A): 89.57 INV IN (C): 89.09 INV OUT (15"):89.09
PROP. 4'ø STORM MH STORM STR. #12 RIM: 92.90 INV IN (15"): 87.02 INV OUT (15"):85.95
PROP. 4'ø STORM MH STORM STR. #13 RIM: 89.90 INV IN (15"): 85.43 INV OUT (18"):85.42
PROP. KRAKEN MTD STORM STR. #11 RIM: 93.78 INV IN (15"): 87.90 INV OUT (15"):87.40
PROP. 4'X4' DBL UG OCS STORM STR. #10 RIM: 94.06 INV OUT (15"):88.00

PROP. GREASE TRAP SAN. STR. #53 RIM: 96.03 INV IN (6"): 91.87 INV OUT (6"): 91.62

PROPOSED Wawa 5,051 SF (54 SPACES) W50T
FF: 96.25
DOOR: 96.25

PROP. R-TANK UNDERGROUND DETENTION BASIN INV: 88.00

DEP. CURB TC: 91.11 G: 90.99
FLUSH G: 90.94
DEP. CURB TC: 90.88 G: 90.76
FLUSH G: 90.94
DEP. CURB TC: 90.80 G: 90.68
FLUSH G: 90.46
DEP. CURB TC: 90.34 G: 90.22
TC: 90.94 G: 90.44
DEP. CURB TC: 90.20 G: 90.08
FLUSH G: 90.40
TC: 90.90 G: 90.45
G: 89.95

20' WIDE UTILITY EASEMENT TO BE DEDICATED TO THE TOWNSHIP OF VOORHEES AS PER PLAN REFERENCED IN NOTE 6E.
TO BE VACATED UPON APPROVAL

CONC. MONUMENT FOUND "EVERS" (HELD)
CAPPED REBAR FOUND "FLOYD"
CAPPED REBAR FOUND
UP C8000
UP C21856
1 STORY BUSINESS

15' PERIMETER BUFFER (EVESHAM)
25' COMMERCIAL BUFFER (VOORHEES)
50' RESIDENTIAL BUFFER (MOWED)
40' RESIDENTIAL BUFFER (EVESHAM)

MATCHLINE 'A'
MATCHLINE 'B'

SPENSER ISLAND
ADING CHART

TOP OF ISLAND	GRADE
95.05	94.55
95.05	94.52
95.05	94.45
95.05	94.48
94.48	93.98
94.48	93.95
94.48	93.88
94.48	93.91
95.28	94.78
95.28	94.74
95.28	94.70
95.28	94.73
94.81	94.31
94.81	94.28
94.81	94.23
94.81	94.26
95.67	95.17
95.67	95.17
95.67	95.12
95.67	95.13
95.31	94.81
95.31	94.81
95.31	94.74
95.31	94.75
96.08	95.58
96.08	95.57
96.08	95.53
96.08	95.54
95.80	95.30
95.80	95.31
95.80	95.26

PROTECT YOURSELF
ALL STATES REQUIRE NOTIFICATION OF EXCAVATORS, DESIGNERS, OR ANY PERSON PREPARING TO DISTURB THE EARTH'S SURFACE ANYWHERE IN ANY STATE
811
Know what's below Call before you dig.

GRAPHIC SCALE
-20 0 10 20 40 80
(IN FEET)
1 INCH = 20 FT.

THIS PLAN SET IS FOR PERMITTING PURPOSES ONLY AND MAY NOT BE USED FOR CONSTRUCTION

Date	Comments	By
08/03/20	REV. PER TOWNSHIP ENGINEER & SEWER COMMENTS	RND

DYNAMIC ENGINEERING
1904 Main Street, Lake Camp, NJ 07719
T: 732.974.0198
F: 732.974.3521
www.dynamicec.com
LAND DEVELOPMENT CONSULTING • PERMITTING • GEOTECHNICAL • ENVIRONMENTAL • SURVEY • PLANNING & ZONING
Additional offices conveniently located at:
Chester, New Jersey T: 908.879.9229 | Toms River, New Jersey T: 732.974.0198 | Newtown, Pennsylvania T: 267.685.0276
Allen, Texas T: 972.534.2100 | Austin, Texas T:512.646.2646 | Houston, Texas T: 281.789.6400
Delray Beach, Florida T: 561.921.8570

TITLE: GRADING PLAN 'A'

PROJECT: VOORHEES ROUTE 73 DEVELOPMENT GROUP, LLC
PROPOSED WAWA FOOD MARKET & FUELING STATION
BLOCK 36, LOT 11 & BLOCK 220, LOTS 9 & 16
NJSH ROUTE 73 AND KRESSON ROAD (CR 671)
TOWNSHIP OF EVESHAM (BURLINGTON COUNTY) & TOWNSHIP OF VOORHEES (CAMDEN COUNTY) NEW JERSEY

JOB No: 0744-12-010
DATE: 12/10/19
DRAWN BY: JHY
SCALE: (H) 1"=20' (V)
DESIGNED BY: MS
CHECKED BY: MAW
SHEET No: 14 OF 35

MATTHEW SHARO — PROFESSIONAL ENGINEER
MARK A. WHITAKER — PROFESSIONAL ENGINEER
CONSTRUCTION CHECK — DATE
CONSTRUCTION CHECK — DATE

SEE SHEET 3 OF 35 FOR GRADING PLAN NOTES

NOTE: ANY IMPORTED FILL SHOULD BE CERTIFIED CLEAN.

MATCHLINE 'A'

MATCHLINE 'B'

TYPE 'B' INLET
STR. #7
96.00
95.50
(15"): 90.74
JT (15"):88.23

TC: 96.90
G: 96.40

PROP. 4'ø SAN. MH
SAN. STR. #43
RIM: 95.34
INV IN (8"): 89.61
INV OUT (8"): 89.51

PROP. TYPE 'B' INLET
STORM STR. #8
TC: 95.70
GRT: 95.20
INV IN (15"): 91.66
INV OUT (15"):91.66

TC: 95.95
G: 95.45

FF: 96.10

SPP-5
SWHT: 84.00

SPP-6
SWHT: 84.00

MB ZONE

RESIDENTIAL USE

C1 ZONE

BURLINGTON COUNTY
TOWNSHIP OF EVESHAM
CAMDEN COUNTY
TOWNSHIP OF VOORHEES

S 5°21'52" E
130.93'

50' RESIDENTIAL BUFFER (VOORHEES)

25' BUFFER (VOORHEES)

MOTS SLOW

RIDGE

CAPPED REBAR FOUND 'DESIGN'

CONC. MONUMENT FOUND

N 84°49'14" W
92.80'

S07°10'54"W 177.

TC: 97.00
G: 96.50

REBAR

TC: 96.50
G: 96.00

N 56°09'14" W
25.26'

N 56°57'14" W
62.01'

PROP. 4'ø SAN. MH
SAN. STR. #44
RIM: 96.09
INV IN (8"): 89.09
INV OUT (8"): 88.99

SHED

TC: 96.10
G: 95.60

N 33°24'16" E
192.66'

PROP. TYPE 'B' INLET
STORM STR. #9
TC: 95.80
GRT: 95.30
INV OUT (15"):92.44

S 33°24'16" W
186.69'

RR ZONE

RELIGIOUS USE

OFFICE USE

1 STORY BARN

2 STORY HOUSE

3 STORY BLDG. & SEMI HOME

TC: 97.52
G: 97.02

FLUSH
G: 96.42

FLUSH
G: 96.96

TC: 97.57
G: 97.07

N 56°09'14" W 73.00'

DEP. CURB
TC: 96.98
G: 96.86

TC: 97.57
G: 97.07

DEP. CURB
TC: 96.42
G: 96.30

TC: 96.89
G: 96.19

MEET EXIST. GRADE

PROP. 4'ø SAN. MH
SAN. STR. #45
RIM: 97.29
INV IN (8"): 88.30
INV IN (8"): 88.30
INV OUT (8"): 88.20

HADDONFIELD - KRESSON ROAD
(AKA COUNTY ROUTE 671)
(AKA HADDONFIELD - MILFORD ROAD)
(AKA KRESSON ROAD)
(AKA HADDONFIELD ROAD)
(VARIABLE WIDTH - AS PER DEED)
(SPEED LIMIT - 45 MPH)

UP C10321

UP C10320

CONC. MONUMENT FOUND

REPLACE DRIVEWAYS & CURBING IN KIND AS REQUIRED

CAPPED REBAR W/CONC. BASE

G: 94.39

G: 94.00

MEET EXIST. TC & G

MEET EXIST. GRADE

MEET EXIST. GRADE

G: 93.48

G: 93.38

RESIDENTIAL USE

(TRACT 2)

WW-5

WW-6

WW-2

S07°10'54"W 177.65'

N34°00'48"E 94.22'

N55°59'12"W
28.00'

14

S34°00'48"W 166.69'

N34°00'48"E 67.47'

ACCESS EASEMENT
LOT 13, BLOCK 220
VOORHEES TOWNSHIP
DEED BOOK 4448
PAGE 889

S36°35'03"E 47.00'

16.68'

'B' INLET
TC: 92.63
GR: 92.13
INV.(OUT): 89.13 (E)

15" RCP (E)

15" RCP (E4)

DEL 'B' INLET
TC: 92.32
GR: 91.83

RIGHT OF WAY DEDICATION
DEED BOOK 4890 PAGE 409

GRADING/UTILITY GRAPHIC LEGEND

PROPERTY LINE (PARCEL IN QUESTION)
OFF-SITE PROPERTY LINES

- EXIST. CABLE LINE
- PROP. CABLE LINE
- EXIST. ELECTRIC LINE
- PROP. ELECTRIC LINE
- EXIST. FIBER OPTIC LINE
- PROP. FIBER OPTIC LINE
- EXIST. FUEL LINE
- PROP. FUEL LINE
- EXIST. OVERHEAD WIRES
- PROP. OVERHEAD WIRES
- EXIST. TELEPHONE LINE
- PROP. TELEPHONE LINE
- EXIST. UNDERGROUND ELEC./TELE. SERVICE (NO. & SIZE OF CONDUITS NOT DEFINED)
- PROP. UNDERGROUND ELEC./TELE. SERVICE (NO. & SIZE OF CONDUITS NOT DEFINED)
- EXIST. WATER LINE
- PROP. WATER LINE
- EXIST. SANITARY SEWER LINE
- PROP. SANITARY SEWER LINE
- EXIST. STORM DRAIN LINE
- PROP. STORM DRAIN LINE
- EXIST. MINOR CONTOUR & ELEVATION
- EXIST. MAJOR CONTOUR & ELEVATION
- PROP. FINISH GRADE CONTOUR & ELEVATION
- EXIST. MONITORING WELL
- APPROX. TEST PIT LOCATION

- EXIST. SPOT ELEVATIONS
- EXIST. GUTTER ELEV.
- EXIST. TOP OF CURB ELEV.
- EXIST. FINISH FLOOR ELEV.
- EXIST. GARAGE FLOOR ELEV.
- EXIST. FIRE HYDRANT
- EXIST. WATER VALVE
- EXIST. GAS VALVE
- EXIST. GAS METER
- EXIST. ELECTRIC METER
- EXIST. ELECTRIC BOX
- EXIST. CLEAN OUT
- EXIST. WELL
- EXIST. WATER SHUT OFF VALVE
- EXIST. TELEPHONE BOX
- EXIST. CABLE TV BOX
- EXIST. UTILITY POLE
- EXIST. GUY WIRE
- EXIST. LIGHT POLE
- EXIST. BUILDING LIGHT
- EXIST. SHOE BOX LIGHT
- EXIST. COBRA LIGHT POLE
- EXIST. TRAFFIC SIGNAL POLE
- EXIST. MANHOLE
- EXIST. "A" INLET
- EXIST. "B" INLET
- EXIST. "C" INLET
- EXIST. YARD INLET
- EXIST. FLARED END SECTION
- EXIST. HEADWALL

- PROP. GRADE SPOT ELEV.
- PROP. TOP OF CURB & FINISHED GRADE ELEV.
- PROP. FINISHED FLOOR ELEV.
- PROP. TOP OF WALL & FINISHED GRADE @ LOW SIDE OF WALL (ACTUAL BOTTOM OF WALL FOOTING TO BE ESTABLISHED BY WALL DESIGNER)
- PROP. TOP OF EXTENDED CURB, (GH) FINISHED GRADE @ HIGH SIDE OF EXTENDED CURB & (GL) FINISHED GRADE @ LOW SIDE OF EXTENDED CURB
- PROP. DIRECTION OF DRAINAGE FLOW ARROW
- PROP. WATER VALVE
- PROP. GAS VALVE
- PROP. STORM CLEANOUT
- PROP. SANITARY CLEANOUT
- PROP. AREA LIGHT
- PROP. OUTLET CONTROL STRUCTURE
- PROP. DRAINAGE MANHOLE
- PROP. SANITARY SEWER MANHOLE
- PROP. "A" INLET
- PROP. "B" INLET
- PROP. "C" INLET
- PROP. YARD INLET
- PROP. FLARED END SECTION
- PROP. HEADWALL

GRAPHIC SCALE
-20 0 10 20 40 80
(IN FEET)
1 INCH = 20 FT.

THIS PLAN SET IS FOR PERMITTING PURPOSES ONLY AND MAY NOT BE USED FOR CONSTRUCTION

DYNAMIC ENGINEERING
LAND DEVELOPMENT CONSULTING • PERMITTING • GEOTECHNICAL • ENVIRONMENTAL • SURVEY • PLANNING & ZONING
1904 Main Street, Lake Como, NJ 07719
T: 732.974.0198 F: 732.974.3521 www.dynamicec.com
Additional offices conveniently located at:
Chester, New Jersey T: 908.879.9229 | Toms River, New Jersey T: 732.974.0198 | Newtown, Pennsylvania T: 267.685.0276
Allen, Texas T: 972.534.2100 | Austin, Texas T:512.646.2646 | Houston, Texas T: 281.789.6400
Delray Beach, Florida T: 561.921.8570

No.	Date	Comments	By
1	08/03/20	REV. PER TOWNSHIP ENGINEER & SEWER COMMENTS	RND

TITLE: GRADING PLAN 'B'

PROJECT: VOORHEES ROUTE 73 DEVELOPMENT GROUP, LLC
PROPOSED WAWA FOOD MARKET & FUELING STATION
BLOCK 36, LOT 11 & BLOCK 220, LOTS 9 & 16
NJSH ROUTE 73 AND KRESSON ROAD (CR 671)
TOWNSHIP OF EVESHAM (BURLINGTON COUNTY) & TOWNSHIP OF VOORHEES (CAMDEN COUNTY) NEW JERSEY

JOB No: 0744-12-010
DATE: 12/10/19
DRAWN BY: JHY
SCALE: (H) 1"=20' (V)
DESIGNED BY: MS
CHECKED BY: MAW
CONSTRUCTION CHECK DATE
CONSTRUCTION CHECK DATE
SHEET No: 15 OF 35

MATTHEW SHARO
PROFESSIONAL ENGINEER

MARK A. WHITAKER
PROFESSIONAL ENGINEER

DURSELF
VATORS, DESIGNERS, OR ANY PERSON
SURFACE ANYWHERE IN ANY STATE
1
elow
e you dig.

SEE SHEET 3 OF 35 FOR UTILITY PLAN NOTES

GRADING/UTILITY GRAPHIC LEGEND

- PROPERTY LINE (PARCEL IN QUESTION)
- OFF-SITE PROPERTY LINES

- EXIST. CABLE LINE
- PROP. CABLE LINE
- EXIST. ELECTRIC LINE
- PROP. ELECTRIC LINE
- EXIST. FIBER OPTIC LINE
- PROP. FIBER OPTIC LINE
- EXIST. FUEL LINE
- PROP. FUEL LINE
- EXIST. OVERHEAD WIRES
- PROP. OVERHEAD WIRES
- EXIST. TELEPHONE LINE
- PROP. TELEPHONE LINE
- EXIST. UNDERGROUND ELEC./TELE. SERVICE (NO. & SIZE OF CONDUITS NOT DEFINED)
- PROP. UNDERGROUND ELEC./TELE. SERVICE (NO. & SIZE OF CONDUITS NOT DEFINED)
- EXIST. WATER LINE
- PROP. WATER LINE
- EXIST. SANITARY SEWER LINE
- PROP. SANITARY SEWER LINE
- EXIST. STORM DRAIN LINE
- PROP. STORM DRAIN LINE
- EXIST. MINOR CONTOUR & ELEVATION
- EXIST. MAJOR CONTOUR & ELEVATION
- PROP. FINISH GRADE CONTOUR & ELEVATION
- EXIST. MONITORING WELL
- APPROX. TEST PIT LOCATION

- EXIST. SPOT ELEVATIONS
- EXIST. GUTTER ELEV.
- EXIST. TOP OF CURB ELEV.
- EXIST. FINISH FLOOR ELEV.
- EXIST. GARAGE FLOOR ELEV.
- EXIST. FIRE HYDRANT
- EXIST. WATER VALVE
- EXIST. GAS VALVE
- EXIST. GAS METER
- EXIST. ELECTRIC METER
- EXIST. ELECTRIC BOX
- EXIST. CLEAN OUT
- EXIST. WELL
- EXIST. WATER SHUT OFF VALVE
- EXIST. TELEPHONE BOX
- EXIST. CABLE TV BOX
- EXIST. UTILITY POLE
- EXIST. GUY WIRE
- EXIST. LIGHT POLE
- EXIST. BUILDING LIGHT
- EXIST. SHOE BOX LIGHT
- EXIST. COBRA LIGHT POLE
- EXIST. TRAFFIC SIGNAL POLE
- EXIST. MANHOLE
- EXIST. "A" INLET
- EXIST. "B" INLET
- EXIST. "C" INLET
- EXIST. YARD INLET
- EXIST. FLARED END SECTION
- EXIST. HEADWALL

- PROP. GRADE SPOT ELEV.
- PROP. TOP OF CURB & FINISHED GRADE ELEV.
- PROP. FINISHED FLOOR ELEV.
- PROP. TOP OF WALL & FINISHED GRADE @ LOW SIDE OF WALL (ACTUAL BOTTOM OF WALL FOOTING TO BE ESTABLISHED BY WALL DESIGNER)
- PROP. TOP OF EXTENDED CURB, (CH) FINISHED GRADE @ HIGH SIDE OF EXTENDED CURB & (CL) FINISHED GRADE @ LOW SIDE OF EXTENDED CURB
- PROP. DIRECTION OF DRAINAGE FLOW ARROW
- PROP. WATER VALVE
- PROP. GAS VALVE
- PROP. STORM CLEANOUT
- PROP. SANITARY CLEANOUT
- PROP. AREA LIGHT
- PROP. OUTLET CONTROL STRUCTURE
- PROP. DRAINAGE MANHOLE
- PROP. SANITARY SEWER MANHOLE
- PROP. 'A' INLET
- PROP. 'B' INLET
- PROP. 'C' INLET
- PROP. YARD INLET
- PROP. FLARED END SECTION
- PROP. HEADWALL

C1 ZONE
C-1 ZONE
RR ZONE
OFFICE USE
1 STORY BUSINESS
RESIDENTIAL USE
BURLINGTON COUNTY TOWNSHIP OF EVESHAM
CAMDEN COUNTY TOWNSHIP OF VOORHEES
UP C08000
S 0°48'30" W 5.72'
CAPPED REBAR FOUND
UP C21858
15' PERIMETER BUFFER (EVESHAM)
S 88°51'54" E 331.75'
R=5815.72'
L=323.10'
Δ=3° 10' 59"
CHB=S 0° 47' 00" E
CHD=323.06'
NJ STATE HIGHWAY ROUTE 73
(MAX. MEDIAN SPEED LIMIT - 55 MPH)
(126 FEET WIDE - AS PER DEED)
PROP. TYPE 'B' INLET STORM STR. #4 TC: 95.65 GRT: 95.15 INV OUT (15"):92.28
PROP. TYPE 'B' INLET STORM STR. #1 TC: 93.35 GRT: 92.85 INV OUT (15"):89.85
PROP. TYPE 'B' INLET STORM STR. #15 TC: 92.80 GRT: 92.30 INV OUT (15"):89.30
PROP. TYPE 'B' INLET STORM STR. #5 TC: 95.70 GRT: 95.20 INV IN (15"): 91.76 INV OUT (15"):91.76
PROP. TYPE 'B' INLET STORM STR. #6 TC: 96.05 GRT: 95.55 INV IN (15"): 91.28 INV OUT (15"):91.28
PROP. TYPE 'B' INLET STORM STR. #7 TC: 96.00 GRT: 95.50 INV IN (15"): 90.74
PROP. TYPE 'B' INLET STORM STR. #14 TC: 95.57 GRT: 95.07 INV: 88.00
PROP. 4'ø STORM MH STORM STR. #13 RIM: 89.90 INV IN (15"): 85.43 INV OUT (18"):85.42
PROP. 4'ø STORM MH STORM STR. #12 RIM: 92.90 INV IN (15"): 87.02 INV OUT (15"):85.95
PROP. 4'ø STORM MH STORM STR. #2 RIM: 93.28 INV IN (B): 89.64 INV IN (A): 89.57 INV IN (C): 89.09 INV OUT (15"):89.09
PROP. KRAKEN MTD STORM STR. #11 RIM: 93.78 INV IN (15"): 87.90 INV OUT (15"):87.40
PROP. 4'X4' DBL UG OCS STORM STR. #10 RIM: 94.06 INV OUT (15"):88.00
PROP. 4'ø SAN. MH SAN. STR. #42 RIM: 95.97 INV IN (6"): 91.38 INV OUT (8"): 90.48
PROP. 4'ø SAN. MH
PROP. INV. (8"): 90.95
PROP. INV. (4"): 89.29
PROP. INV. (6"): 88.00
PROP. INV. (15"): 88.00
PROP. INV. (15"): 88.00
PROP. INV. (15"): 88.00
PROP. INV. (4"): 88.00
PROP. INV. (8"): 88.00
PROP. INV. (15"): 88.00
PROP. 2-WAY SAN. C/O INV (6"): 92.74
PROP. 2-WAY SAN. C/O INV (6"): 92.25
PROP. SAN. C/O INV (6"): 91.54
FF: 96.25
PROP. GREASE TRAP SAN. STR. #53 RIM: 96.03 INV IN (6"): 91.87 INV OUT (6"): 91.62
PROPOSED
15" HDPE 104 LF @ 0.50% SL. STM SEWER
15" HDPE 86 LF @ 0.50% SL. STM SEWER
15" HDPE 108 LF @ 0.50% SL. STM SEWER
15" HDPE 46 LF @ 0.50% SL. STM SEWER
15" HDPE 41 LF @ 0.50% SL. STM SEWER
15" HDPE 42 LF @ 0.50% SL. STM SEWER
15" HDPE 47 LF @ 2.31% SL. STM SEWER
15" HDPE 40 LF @ 0.94% SL. STM SEWER
15" HDPE 106 LF @ 0.49% SL. STM SEWER
15" HDPE 13 LF @ 0.77% SL. STM SEWER
18" RCP 151 LF @ 0.50% SL. STM SEWER
8" SDR-35 PVC 217 LF SAN. SEWER @ MIN. 0.40% SL.
6" SDR-35 PVC SAN. LATERAL @ MIN. 1.04% SL.
PROP. 6" SCH 40 PVC ROOF LEADER @ MIN. 1.00% SL. (TYP.)
PROP. 8" SCH 40 PVC ROOF LEADER @ MIN. 1.00% SL. (TYP.)
PROP. R-TANK UNDERGROUND DETENTION BASIN INV: 88.00
PROP. INSPECTION PORT (TYP.)
PROP. 2" BLACK POLY WATER SERVICE
PROP. UNDERGROUND ELEC. & TELE. SERVICE
PROP. UNDERGROUND GAS SERVICE
PROP. GAS CONNECTION
PROP. UGET CONNECTION TO RELOCATED U/P
PIPE CROSSING 8" PVC BOP: 90.15 15" RCP TOP: 89.55 SEPARATION: 0.60'
20' WIDE UTILITY EASEMENT TO BE DEDICATED TO THE TOWNSHIP OF VOORHEES AS PER PLAN REFERENCED IN NOTE 6E.
TO BE VACATED UPON APPROVAL
50' RESIDENTIAL BUFFER (VOORHEES)
40' RESIDENTIAL BUFFER (EVESHAM)
25' COMMERCIAL BUFFER (VOORHEES)
S 80°14'19" E 92.40'
CONC. MONUMENT FOUND "EVERS" (HELD)
N 0°38'54" E 398.33'
CAPPED REBAR FOUND "FLOYD"
CAPPED REBAR FOUND
CAPPED REBAR
SEE SHEET 18
MATCHLINE 'A'
MATCHLINE 'B'
GRAPHIC SCALE
-20 0 10 20 40 80
(IN FEET)
1 INCH = 20 FT.

THIS PLAN SET IS FOR PERMITTING PURPOSES ONLY AND MAY NOT BE USED FOR CONSTRUCTION

DYNAMIC ENGINEERING
1904 Main Street, Lake Como, NJ 07719
T: 732.974.0198 F: 732.974.3521 www.dynamicec.com
LAND DEVELOPMENT CONSULTING • PERMITTING • GEOTECHNICAL • ENVIRONMENTAL • SURVEY • PLANNING & ZONING
Additional offices conveniently located at:
Chester, New Jersey T: 908.879.9229 | Toms River, New Jersey T: 732.974.0198 | Newtown, Pennsylvania T: 267.685.0276
Allen, Texas T: 972.534.2100 | Austin, Texas T:512.646.2646 | Houston, Texas T: 281.789.6400
Delray Beach, Florida T: 561.921.8570

TITLE: DRAINAGE & UTILITY PLAN 'A'

PROJECT: VOORHEES ROUTE 73 DEVELOPMENT GROUP, LLC
PROPOSED WAWA FOOD MARKET & FUELING STATION
BLOCK 36, LOT 11 & BLOCK 220, LOTS 9 & 16
NJSH ROUTE 73 AND KRESSON ROAD (CR 671)
TOWNSHIP OF EVESHAM (BURLINGTON COUNTY) & TOWNSHIP OF VOORHEES (CAMDEN COUNTY) NEW JERSEY

By	Date	Comments
RND	08/03/20	REV. PER TOWNSHIP ENGINEER & SEWER COMMENTS

MATTHEW SHARO — PROFESSIONAL ENGINEER
MARK A. WHITAKER — PROFESSIONAL ENGINEER

JOB No: 0744-12-010
DATE: 12/10/19
DRAWN BY: KTK
SCALE: (H) 1"=20' (V)
DESIGNED BY: MS
CHECKED BY: MAW
CONSTRUCTION CHECK — DATE
CONSTRUCTION CHECK — DATE
SHEET No: 16 OF 35

MATCHLINE 'A'

MATCHLINE 'B'

SEE SHEET 3 OF 35 FOR UTILITY PLAN NOTES

BURLINGTON COUNTY
TOWNSHIP OF EVESHAM
CAMDEN COUNTY
TOWNSHIP OF VOORHEES

C1 ZONE

MB ZONE

RR ZONE

RESIDENTIAL USE

OFFICE USE

1 STORY GARAGE

SHED

2 STORY BRICK & SIDING HOME

2 STORY HOUSE

1 STORY BANK

1 STORY TD BANK BUILDING

PROP. 4'ø SAN. MH
SAN. STR. #43
RIM: 95.34
INV IN (8"): 89.61
INV OUT (8"): 89.51

15" HDPE 156 LF @ 4.11% SL. STM SEWER

50' RESIDENTIAL BUFFER (VOORHEES)

PROP. TYPE 'B' INLET
STORM STR. #8
TC: 95.70
GRT: 95.20
INV IN (15"): 91.66
INV OUT (15"):91.66

50' RESIDENTIAL BUFFER (VOORHEES)

8" SDR-35 PVC 105 LF
SAN. SEWER @ MIN. 0.40% SL.

15" HDPE 156 LF @ 0.50% SL. STM SEWER

25' BUFFER (VOORHEES)

CAPPED REBAR FOUND "DESIGN"

CONC. MONUMENT FOUND

REBAR

PROP. 4'ø SAN. MH
SAN. STR. #44
RIM: 96.09
INV IN (8"): 89.09
INV OUT (8"): 88.99

PROP. TYPE 'B' INLET
STORM STR. #9
TC: 95.80
GRT: 95.30
INV OUT (15"):92.44

PROP. HOT BOX IN ACCORDANCE WITH NJAW SPECIFICATIONS

PROP. 8" SDR-35 PVC 174 LF SAN. SEWER @ MIN. 0.40% SL.

FOR FUTURE CONNECTION OF LOTS 12, 14 & 15 TO THE TOWNSHIP SEWER SYSTEM

PROP. WET TAP CONNECTION

MOTS

SLOW

S 5°21'52" E
130.93'

92.69'
N 84°49'14" W

N 56°09'14" W
25.26'

S 33°24'16" E
192.66'

198.69'
S 33°24'16" W

'09'14" W 73.00'

(TRACT 2)

S37°20'24"W 17.65'

N34°00'48"E 94.22'

N55°59'12"W
26.00'

S34°00'48"W 166.69'

N34°00'48"E 67.47'

ACCESS EASEMENT
LOT 13, BLOCK 220
VOORHEES TOWNSHIP
DEED BOOK 4448
PAGE 889

S56°35'03"E 47.00'

N33°25'39"E 16.48'

4" PVC (ES4)
INV.: 92.16

CAPPED REBAR (FOUND (SMASHED))

'A' INLET
TC: 89.56
GR: 89.24
INV.(IN): 84.29 (E21)
INV.(OUT): 84.29 (E20)

LINK. MH
RIM=91.82

CAPPED REBAR W/CONC. BASE

RIGHT OF WAY DEDICATION
DEED BOOK 4690 PAGE 408

'B' INLET
TC: 92.63
GR: 92.13
INV.(OUT): 88.13 (E3)

DEL 'B' INLET
TC: 92.32
GR: 91.83
INV.(IN): 88.63 (E3)

'B' INLET
TC: 91.61
GR: 91.12
INV.(IN): 87.97 (E4)

CONC. MONUMENT FOUND

15" RCP (ES)

HADDONFIELD – KRESSON ROAD
(AKA COUNTY ROUTE 671)
(AKA HADDONFIELD – MILFORD ROAD)
(AKA KRESSON ROAD)
(AKA HADDONFIELD ROAD)
(VARIABLE WIDTH – AS PER DEED)
(SPEED LIMIT – 45 MPH)

UP C10320

CONC. MONUMENT FOUND

SEE SHEET 18

PROP. 4'ø SAN. MH
SAN. STR. #45
RIM: 97.29
INV IN (8"): 88.30
INV IN (8"): 88.30
INV OUT (8"): 88.20

PROX. LOCATION OF EX. 16" NJAW MAIN PER AVAILABLE

GRADING/UTILITY GRAPHIC LEGEND

PROPERTY LINE (PARCEL IN QUESTION)
OFF-SITE PROPERTY LINES

C	EXIST. CABLE LINE	EXIST. SPOT ELEVATIONS	PROP. GRADE SPOT ELEV.
C	PROP. CABLE LINE	EXIST. GUTTER ELEV.	PROP. TOP OF CURB & FINISHED GRADE ELEV.
E	EXIST. ELECTRIC LINE	EXIST. TOP OF CURB ELEV.	
E	PROP. ELECTRIC LINE	EXIST. FINISH FLOOR ELEV.	PROP. FINISHED FLOOR ELEV.
FO	EXIST. FIBER OPTIC LINE	EXIST. GARAGE FLOOR ELEV.	
FO	PROP. FIBER OPTIC LINE	EXIST. FIRE HYDRANT	PROP. TOP OF WALL & FINISHED GRADE @ LOW SIDE OF WALL (ACTUAL BOTTOM OF WALL FOOTING TO BE ESTABLISHED BY WALL DESIGNER)
FUEL	EXIST. FUEL LINE	EXIST. WATER VALVE	
FUEL	PROP. FUEL LINE	EXIST. GAS VALVE	PROP. TOP OF EXTENDED CURB, (CH) FINISHED GRADE @ HIGH SIDE OF EXTENDED CURB & (CL) FINISHED GRADE @ LOW SIDE OF EXTENDED CURB
OH	EXIST. OVERHEAD WIRES	EXIST. GAS METER	
OH	PROP. OVERHEAD WIRES	EXIST. ELECTRIC METER	
T	EXIST. TELEPHONE LINE	EXIST. ELECTRIC BOX	PROP. DIRECTION OF DRAINAGE FLOW ARROW
T	PROP. TELEPHONE LINE	EXIST. CLEAN OUT	
UGET	EXIST. UNDERGROUND ELEC./TELE. SERVICE (NO. & SIZE OF CONDUITS NOT DEFINED)	EXIST. WELL	PROP. WATER VALVE
		EXIST. WATER SHUT OFF VALVE	PROP. GAS VALVE
UGET	PROP. UNDERGROUND ELEC./TELE. SERVICE (NO. & SIZE OF CONDUITS NOT DEFINED)	EXIST. TELEPHONE BOX	
		EXIST. CABLE TV BOX	
W	EXIST. WATER LINE	EXIST. UTILITY POLE	PROP. STORM CLEANOUT
W	PROP. WATER LINE	EXIST. GUY WIRE	PROP. SANITARY CLEANOUT
S	EXIST. SANITARY SEWER LINE	EXIST. LIGHT POLE	
S	PROP. SANITARY SEWER LINE	EXIST. BUILDING LIGHT	
		EXIST. SHOE BOX LIGHT	PROP. AREA LIGHT
	EXIST. STORM DRAIN LINE	EXIST. COBRA LIGHT POLE	PROP. OUTLET CONTROL STRUCTURE
	PROP. STORM DRAIN LINE	EXIST. TRAFFIC SIGNAL POLE	PROP. DRAINAGE MANHOLE
	EXIST. MINOR CONTOUR & ELEVATION	EXIST. MANHOLE	PROP. SANITARY SEWER MANHOLE
	EXIST. MAJOR CONTOUR & ELEVATION	EXIST. "A" INLET	PROP. 'A' INLET
XX	PROP. FINISH GRADE CONTOUR & ELEVATION	EXIST. "B" INLET	PROP. 'B' INLET
		EXIST. "C" INLET	PROP. 'C' INLET
MW	EXIST. MONITORING WELL	EXIST. YARD INLET	PROP. YARD INLET
TP	APPROX. TEST PIT LOCATION	EXIST. FLARED END SECTION	PROP. FLARED END SECTION
		EXIST. HEADWALL	PROP. HEADWALL

GRAPHIC SCALE
-20 0 10 20 40 80
(IN FEET)
1 INCH = 20 FT.

THIS PLAN SET IS FOR PERMITTING PURPOSES ONLY AND MAY NOT BE USED FOR CONSTRUCTION

By	Comments	Date
RND	REV. PER TOWNSHIP ENGINEER & SEWER	08/03/20

DYNAMIC ENGINEERING
LAND DEVELOPMENT CONSULTING • PERMITTING • GEOTECHNICAL • ENVIRONMENTAL • SURVEY • PLANNING & ZONING
1904 Main Street
Lake Como, NJ 07719
T: 732.974.0198
F: 732.974.3521
www.dynamicec.com
Additional offices conveniently located at:
Chester, New Jersey T: 908.879.9229 | Toms River, New Jersey T: 732.974.0198 | Newtown, Pennsylvania T: 267.685.0276
Allen, Texas T: 972.534.2100 | Austin, Texas T:512.646.2646 | Houston, Texas T: 281.789.6400
Delray Beach, Florida T: 561.921.8570

TITLE: DRAINAGE & UTILITY PLAN 'B'

PROJECT: VOORHEES ROUTE 73 DEVELOPMENT GROUP, LLC
PROPOSED WAWA FOOD MARKET & FUELING STATION
BLOCK 36, LOT 11 & BLOCK 220, LOTS 9 & 16
NJSH ROUTE 73 AND KRESSON ROAD (CR 671)
TOWNSHIP OF EVESHAM (BURLINGTON COUNTY) & TOWNSHIP OF VOORHEES (CAMDEN COUNTY) NEW JERSEY

JOB No: 0744-12-010
DATE: 12/10/19
DRAWN BY: KTK
SCALE: (H) 1"=20' (V)
DESIGNED BY: MS
CHECKED BY: MAW
SHEET No: 17 OF 35

MATTHEW SHARO
PROFESSIONAL ENGINEER

MARK A. WHITAKER
PROFESSIONAL ENGINEER

CONSTRUCTION CHECK DATE
CONSTRUCTION CHECK DATE

OURSELF
NATORS, DESIGNERS, OR ANY PERSON
SURFACE ANYWHERE IN ANY STATE.
ollow
re you dig.

NOTE: ROADWAY AND SHOULDER TO BE REPLACED PER CAMDEN COUNTY DESIGN STANDARDS AS REQUIRED DURING THE INSTALLATION OF THE PROPOSED 8" SEWER MAIN

THE DRIVEWAY APRONS FOR LOTS 17 & 18 TO BE REPAIRED AS NECESSARY TO INSTALL PROPOSED SANITARY MAIN EXTENSION.

SAN. MH
RIM: 89.38
INV.(IN): 86.08 (E49)
INV.(OUT): 86.08 (E50)

SAN. MH
RIM: 91.00
INV.(IN): 86.35 (E48)
INV.(OUT): 86.35 (E49)

PROP. INV. (8"): 86.45

CONC. MONUMENT FOUND

PROP. 4'ø SAN. MH
SAN. STR. #46
RIM: 97.27
INV IN (8"): 87.37
INV OUT (8"): 87.27

PROP. LATERAL CONNECTION FOR LOT 17. EXACT LOCATION TO BE CONFIRMED BY TOWNSHIP PERSONNEL IN THE FIELD

8" SDR-35 PVC 206 LF
SAN. SEWER @ MIN. 0.40% SL.

8" SDR-35 PVC 206 LF
SAN. SEWER @ MIN. 0.40% SL.

8" SDR-35 PVC 174 LF
SAN. SEWER @ MIN. 0.40% SL.

N 56°09'14" W 73.00'

PROP. HOT BOX IN ACCORDANCE WITH NJAW SPECIFICATIONS

2 STORY HOUSE

FOR FUTURE CONNECTION OF LOTS 12, 14 & 15 TO THE TOWNSHIP SEWER SYSTEM

PROP. 4'ø SAN. MH
SAN. STR. #45
RIM: 97.29
INV IN (8"): 88.30
INV IN (8"): 88.30
INV OUT (8"): 88.20

HADDONFIELD – KRESSON ROAD
(AKA COUNTY ROUTE 671)
(AKA HADDONFIELD – MILFORD ROAD)
(AKA KRESSON ROAD)
(AKA HADDONFIELD ROAD)
(VARIABLE WIDTH - AS PER DEED)
(SPEED LIMIT - 45 MPH)

APPROX. LOCATION OF EX. 16" NJAW MAIN PER AVAILABLE MAPPING

PROP. WET TAP CONNECTION

CONC. MONUMENT FOUND

15" CMP (E2)

'B' INLET
TC: 90.75
GR: 89.25
INV.(IN): 86.73 (E1)
INV.(OUT): 86.89 (E2)

'B' INLET
TC: 90.78
GR: 90.28
INV.(OUT): 87.53 (E1)

STORM MH
RIM: 88.37
INV.(N): 85.77 (E2)
INV.(N): 85.67 (E52)
INV.(OUT): 85.62 (E42)

8" SAN. PVC (E47)

8" SAN. PVC (E48)

UP BT122VT

UP PN35320

UP C10322

UP C10321

UP C10320

UP 68134/ 47406 COND

2 STORY HOUSE

PROPOSED OFF-SITE SANITARY SEWER CONNECTION

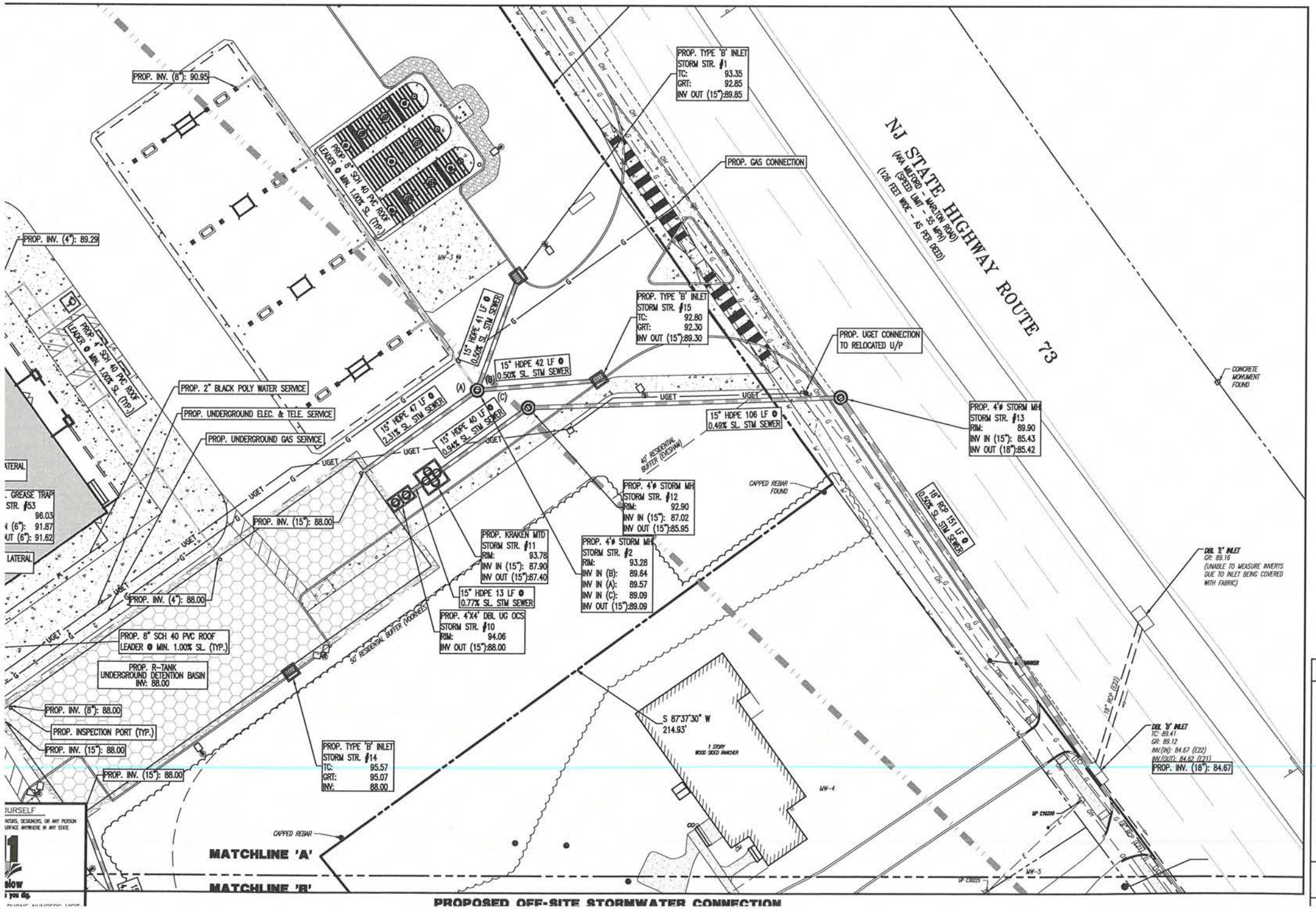

PROPOSED OFF-SITE STORMWATER CONNECTION

SEE SHEET 3 OF 35 FOR UTILITY PLAN NOTES

GRADING/UTILITY GRAPHIC LEGEND

PROPERTY LINE (PARCEL IN QUESTION)
OFF-SITE PROPERTY LINES

EXIST. CABLE LINE	EXIST. SPOT ELEVATIONS	C: 000.00	PROP. GRADE SPOT ELEV.
PROP. CABLE LINE	EXIST. GUTTER ELEV.	TC: 000.00 / G: 000.00	PROP. TOP OF CURB & FINISHED GRADE ELEV.
EXIST. ELECTRIC LINE	EXIST. TOP OF CURB ELEV.		
PROP. ELECTRIC LINE	EXIST. FINISH FLOOR ELEV.	FF: 000.00	PROP. FINISHED FLOOR ELEV.
EXIST. FIBER OPTIC LINE	EXIST. GARAGE FLOOR ELEV.		
PROP. FIBER OPTIC LINE	EXIST. FIRE HYDRANT	TW: 000.00 / GL: 000.00	PROP. TOP OF WALL & FINISHED GRADE @ LOW SIDE OF WALL (ACTUAL BOTTOM OF WALL FOOTING TO BE ESTABLISHED BY WALL DESIGNER)
EXIST. FUEL LINE	EXIST. WATER VALVE		
PROP. FUEL LINE	EXIST. GAS VALVE	TC: 000.00 / GH: 000.00 / GL: 000.00	PROP. TOP OF EXTENDED CURB, (GH) FINISHED GRADE @ HIGH SIDE OF EXTENDED CURB & (GL) FINISHED GRADE @ LOW SIDE OF EXTENDED CURB
EXIST. OVERHEAD WIRES	EXIST. GAS METER		
PROP. OVERHEAD WIRES	EXIST. ELECTRIC METER		
EXIST. TELEPHONE LINE	EXIST. ELECTRIC BOX		PROP. DIRECTION OF DRAINAGE FLOW ARROW
PROP. TELEPHONE LINE	EXIST. CLEAN OUT		
EXIST. UNDERGROUND ELEC./TELE. SERVICE (NO. & SIZE OF CONDUITS NOT DEFINED)	EXIST. WELL		PROP. WATER VALVE
	EXIST. WATER SHUT OFF VALVE		PROP. GAS VALVE
PROP. UNDERGROUND ELEC./TELE. SERVICE (NO. & SIZE OF CONDUITS NOT DEFINED)	EXIST. TELEPHONE BOX		
	EXIST. CABLE TV BOX		
EXIST. WATER LINE	EXIST. UTILITY POLE		PROP. STORM CLEANOUT
PROP. WATER LINE	EXIST. GUY WIRE		PROP. SANITARY CLEANOUT
EXIST. SANITARY SEWER LINE	EXIST. LIGHT POLE		
	EXIST. BUILDING LIGHT		
PROP. SANITARY SEWER LINE	EXIST. SHOE BOX LIGHT		PROP. AREA LIGHT
EXIST. STORM DRAIN LINE	EXIST. COBRA LIGHT POLE		PROP. OUTLET CONTROL STRUCTURE
PROP. STORM DRAIN LINE	EXIST. TRAFFIC SIGNAL POLE		PROP. DRAINAGE MANHOLE
EXIST. MINOR CONTOUR & ELEVATION	EXIST. MANHOLE		PROP. SANITARY SEWER MANHOLE
EXIST. MAJOR CONTOUR & ELEVATION	EXIST. "A" INLET		PROP. 'A' INLET
PROP. FINISH GRADE CONTOUR & ELEVATION	EXIST. "B" INLET		PROP. 'B' INLET
EXIST. MONITORING WELL	EXIST. "E" INLET		PROP. 'E' INLET
	EXIST. YARD INLET		PROP. YARD INLET
APPROX. TEST PIT LOCATION	EXIST. FLARED END SECTION		PROP. FLARED END SECTION
	EXIST. HEADWALL		PROP. HEADWALL

GRAPHIC SCALE
-20 0 10 20 40 80
(IN FEET)
1 INCH = 20 FT.

THIS PLAN SET IS FOR PERMITTING PURPOSES ONLY AND MAY NOT BE USED FOR CONSTRUCTION

No.	Date	Comments	By
1	08/03/20	REV. PER TOWNSHIP ENGINEER & SEWER COMMENTS	RND

DYNAMIC ENGINEERING
LAND DEVELOPMENT CONSULTING • PERMITTING • GEOTECHNICAL • ENVIRONMENTAL • SURVEY • PLANNING & ZONING
1904 Main Street, Lake Como, NJ 07719 T: 732.974.0198 F: 732.974.3521 www.dynamicec.com
Additional offices conveniently located in:
Chester, New Jersey T: 908.879.9229 | Toms River, New Jersey T: 732.974.0198 | Newtown, Pennsylvania T: 267.685.0276
Allen, Texas T: 972.534.2100 | Austin, Texas T:512.646.2646 | Houston, Texas T: 281.789.6400
Delray Beach, Florida T: 561.921.8270

TITLE: OFF-SITE DRAINAGE & UTILITY PLAN

PROJECT: **VOORHEES ROUTE 73 DEVELOPMENT GROUP, LLC**
PROPOSED WAWA FOOD MARKET & FUELING STATION
BLOCK 36, LOT 11 & BLOCK 220, LOTS 9 & 16
NJSH ROUTE 73 AND KRESSON ROAD (CR 671)
TOWNSHIP OF EVESHAM (BURLINGTON COUNTY) & TOWNSHIP OF VOORHEES (CAMDEN COUNTY) NEW JERSEY

JOB No:	0744-12-010
DATE:	12/10/19
DRAWN BY:	KTK
SCALE: (H) 1"=20' (V)	
DESIGNED BY:	MS
CHECKED BY:	MAW
CONSTRUCTION CHECK	DATE
SHEET No:	18 OF 35

MATTHEW SHARO — PROFESSIONAL ENGINEER
MARK A. WHITAKER — PROFESSIONAL ENGINEER

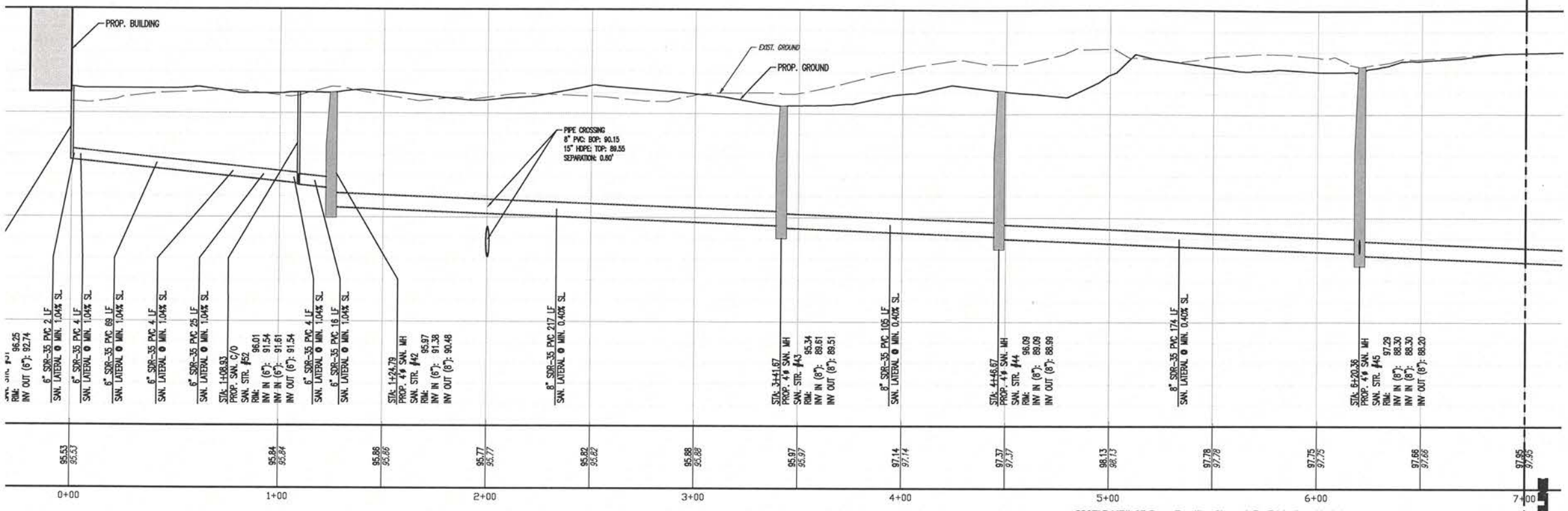

PROFILE VIEW OF Prop. Two Way Cleanout To Exist. San. Manhole
HORIZONTAL SCALE: 1"=30'
VERTICAL SCALE: 1"=3'

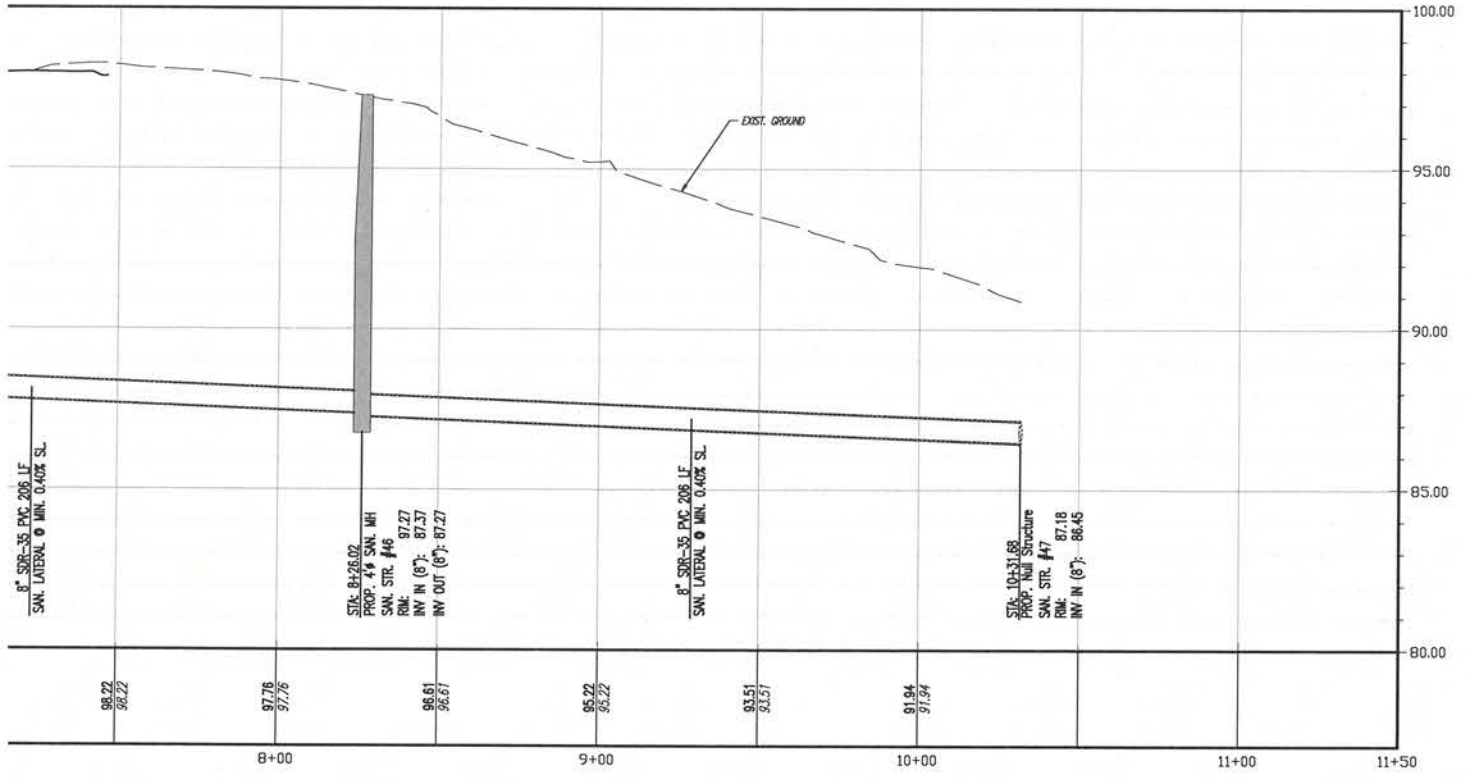

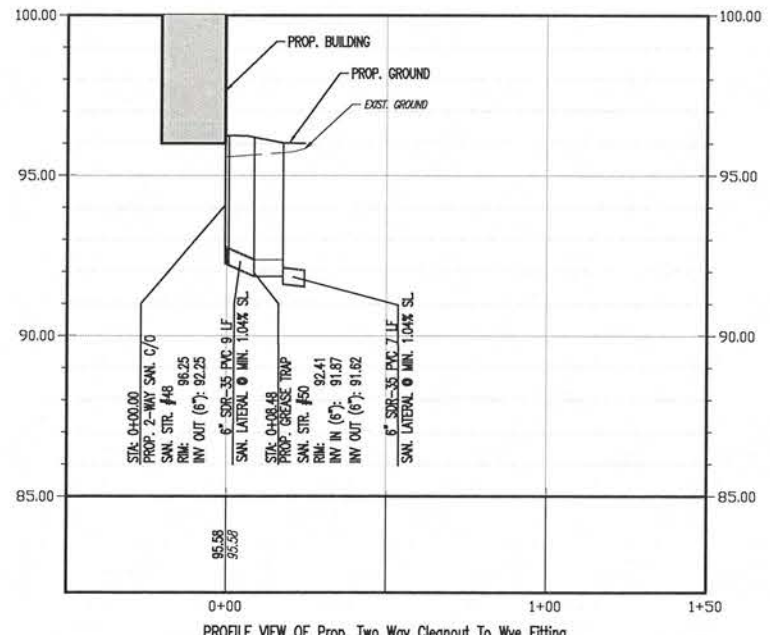

PROFILE VIEW OF Prop. Two Way Cleanout To Wye Fitting
HORIZONTAL SCALE: 1"=30'
VERTICAL SCALE: 1"=3'

THIS PLAN SET IS FOR PERMITTING PURPOSES ONLY AND MAY NOT BE USED FOR CONSTRUCTION

By	Date	Comments
RND	08/03/20	REV. PER TOWNSHIP ENGINEER & SEWER

DYNAMIC ENGINEERING
LAND DEVELOPMENT CONSULTING • PERMITTING • GEOTECHNICAL • ENVIRONMENTAL • SURVEY • PLANNING & ZONING
1904 Main Street, Lake Como, NJ 07719 T: 732.974.0198 F: 732.974.3521 www.dynamicec.com
Additional offices conveniently located at:
Chester, New Jersey T: 908.879.9229 | Toms River, New Jersey T: 732.974.0198 | Newtown, Pennsylvania T: 267.685.0276
Allen, Texas T: 972.534.2100 | Austin, Texas T: 512.646.2644 | Houston, Texas T: 281.789.6400
Delray Beach, Florida T: 561.921.8570

TITLE: SANITARY PROFILES

PROJECT: VOORHEES ROUTE 73 DEVELOPMENT GROUP, LLC
PROPOSED WAWA FOOD MARKET & FUELING STATION
BLOCK 36, LOT 11 & BLOCK 220, LOTS 9 & 16
NJSH ROUTE 73 AND KRESSON ROAD (CR 671)
TOWNSHIP OF EVESHAM (BURLINGTON COUNTY) & TOWNSHIP OF VOORHEES (CAMDEN COUNTY) NEW JERSEY

JOB No: 0744-12-010
DATE: 12/10/19
DRAWN BY: RND
SCALE: (H) 1"=30' (V) 1"=3'
DESIGNED BY: MS
CHECKED BY: MAW
SHEET No: 19 OF 35

MATTHEW SHARO — PROFESSIONAL ENGINEER — CONSTRUCTION CHECK — DATE
MARK A. WHITAKER — PROFESSIONAL ENGINEER — CONSTRUCTION CHECK — DATE

OURSELF
ANTORS, DESIGNERS, OR ANY PERSON
URFACE ANYWHERE IN ANY STATE.
elow
u you dig.
PHONE NUMBERS VISIT:

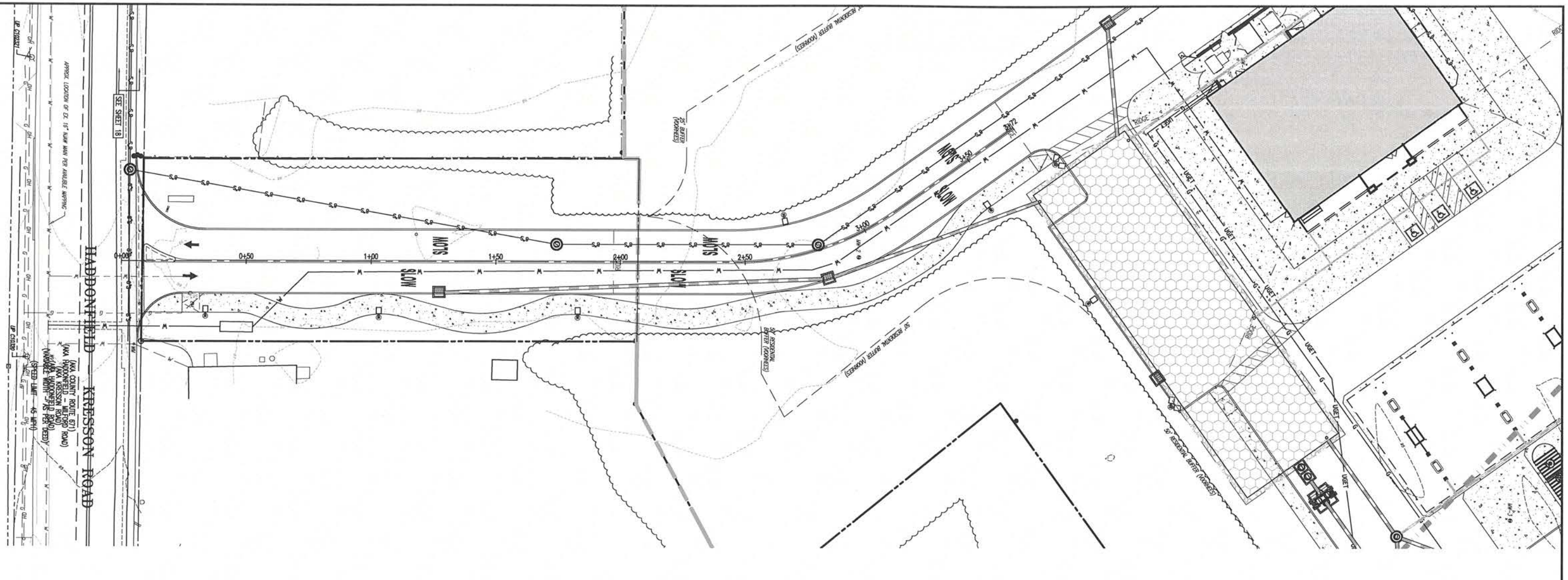

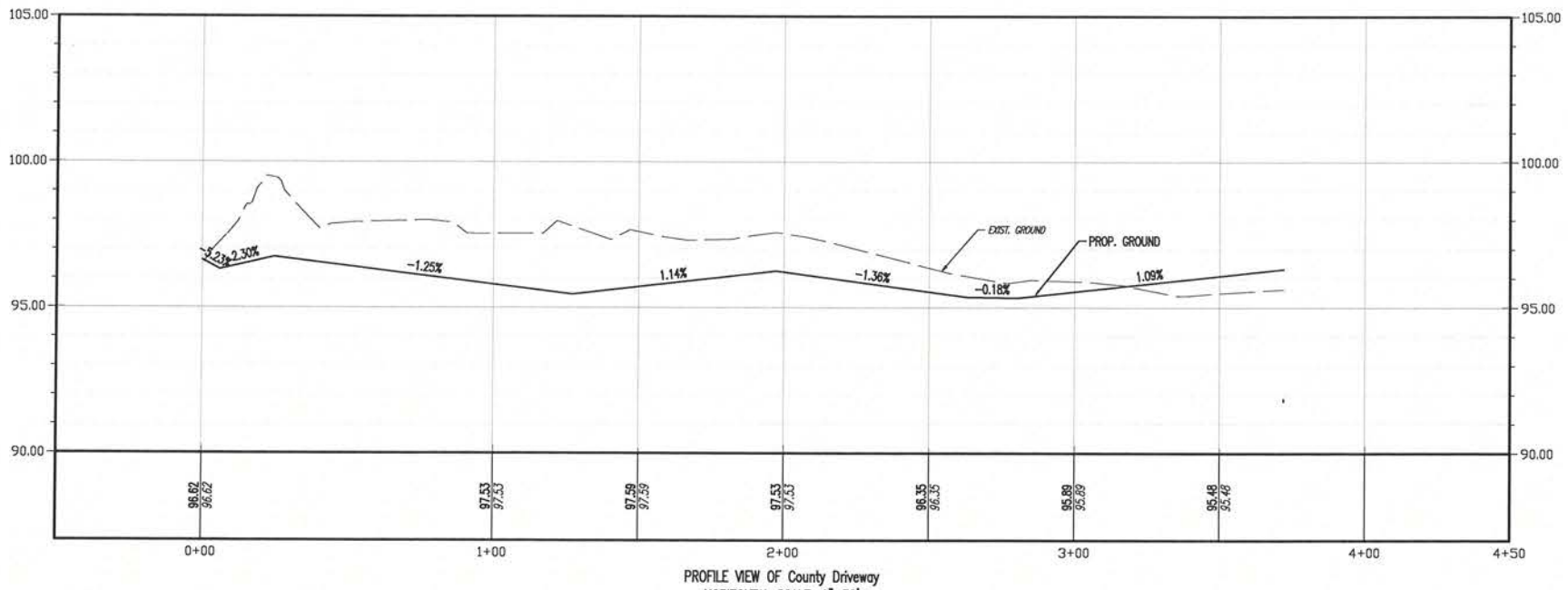

PROFILE VIEW OF County Driveway
HORIZONTAL SCALE: 1"=30'
VERTICAL SCALE: 1"=3'

GRAPHIC SCALE

-20 0 10 20 40 80

(IN FEET)
1 INCH = 20 FT.

THIS PLAN SET IS FOR PERMITTING PURPOSES ONLY AND MAY NOT BE USED FOR CONSTRUCTION

By	Comments	Date
RND	REV. PER TOWNSHIP ENGINEER & SEWER	08/03/20

DYNAMIC ENGINEERING
LAND DEVELOPMENT CONSULTING • PERMITTING • GEOTECHNICAL • ENVIRONMENTAL • SURVEY • PLANNING & ZONING
1904 Main Street - Lake Como, NJ 07719 T: 732.974.0198 F: 732.974.3521 www.dynamicec.com
Additional offices conveniently located in:
Chester, New Jersey T: 908.879.9229 | Toms River, New Jersey T: 732.974.0198 | Newtown, Pennsylvania T: 267.685.0276
Allen, Texas T: 972.534.2100 | Austin, Texas T: 512.646.2646 | Houston, Texas T: 281.789.6400
Delray Beach, Florida T: 561.921.8570

TITLE: COUNTY DRIVEWAY PROFILE

PROJECT: **VOORHEES ROUTE 73 DEVELOPMENT GROUP, LLC**
PROPOSED WAWA FOOD MARKET & FUELING STATION
BLOCK 36, LOT 11 & BLOCK 220, LOTS 9 & 16
NJSH ROUTE 73 AND KRESSON ROAD (CR 671)
TOWNSHIP OF EVESHAM (BURLINGTON COUNTY) & TOWNSHIP OF VOORHEES (CAMDEN COUNTY) NEW JERSEY

JOB No:	0744-12-010
DATE:	12/10/19
DRAWN BY:	RND
SCALE: (H) AS (V) SHOWN	
DESIGNED BY:	MS
CHECKED BY:	MAW
SHEET No:	20 OF 35

MATTHEW SHARO — PROFESSIONAL ENGINEER
MARK A. WHITAKER — PROFESSIONAL ENGINEER
CONSTRUCTION CHECK — DATE
CONSTRUCTION CHECK — DATE

HURSELF
ITORS, DESIGNERS, OR ANY PERSON
RFACE ANYWHERE IN ANY STATE
1
blow
you dig.

THIS PLAN TO BE UTILIZED FOR LANDSCAPE PURPOSES ONLY

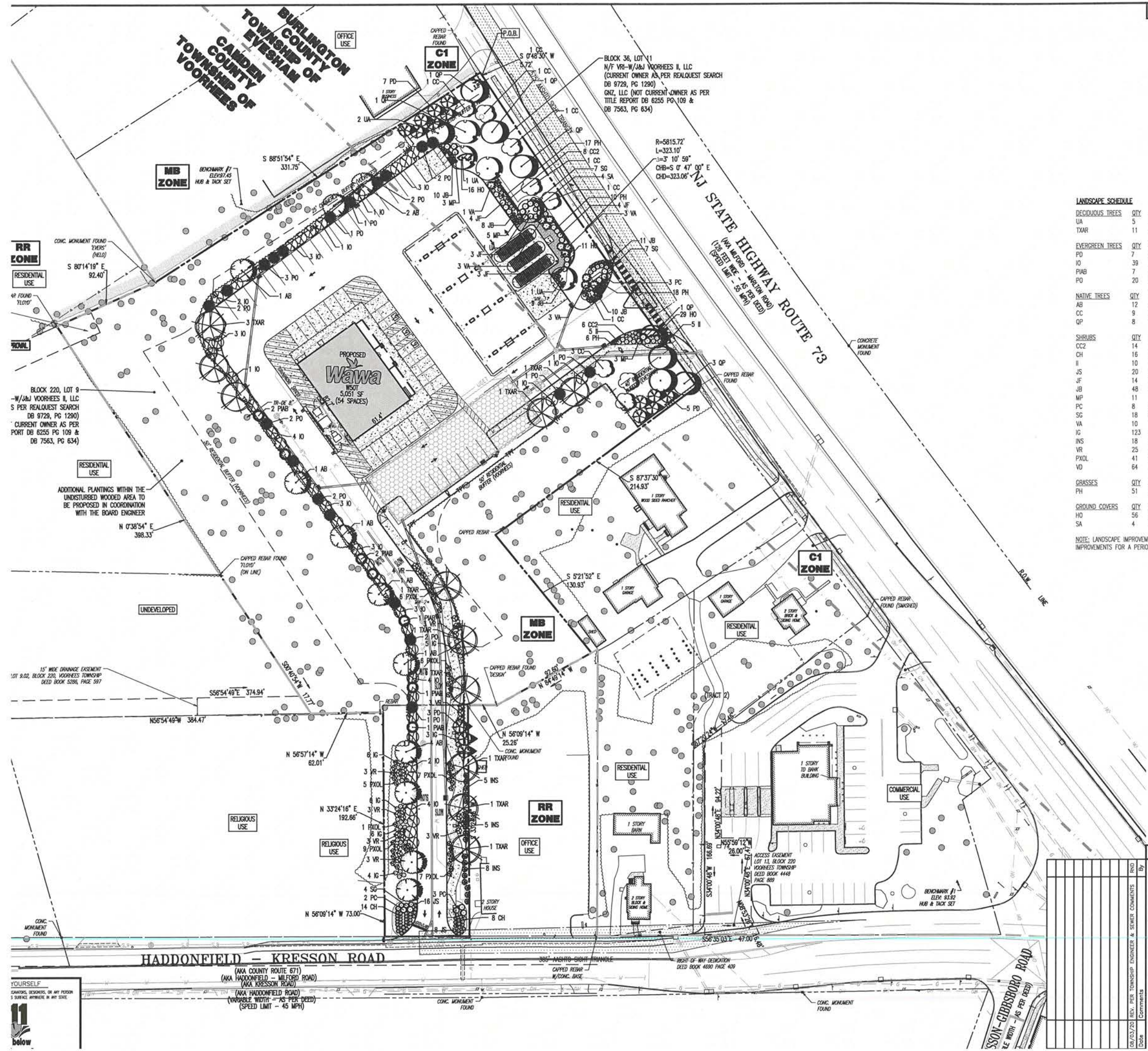

LANDSCAPE SCHEDULE

DECIDUOUS TREES	QTY	BOTANICAL NAME	COMMON NAME	CONT	CAL	SIZE	REMARKS
UA	5	ULMUS PARVIFOLIA 'ALLEE'	ALLEE LACEBARK ELM	B & B	3.5"CAL		
TXAR	11	TILIA X AMERICANA 'REDMOND'	REDMOND LINDEN	B & B	2 1/2-3" CAL		

EVERGREEN TREES	QTY	BOTANICAL NAME	COMMON NAME	CONT	CAL	SIZE	REMARKS
PD	7	PSEUDOTSUGA MENZIESII	DOUGLAS FIR	B & B		8'-10' HT.	
IO	39	ILEX OPACA	AMERICAN HOLLY	B & B		6-7'	
PIAB	7	PICEA ABIES	NORWAY SPRUCE	B & B		6-7'	
PO	20	PICEA OMORIKA	SERBIAN SPRUCE	B & B		6-7'	

NATIVE TREES	QTY	BOTANICAL NAME	COMMON NAME	CONT	CAL	SIZE	REMARKS
AB	12	ACER SACCHARUM 'BONFIRE'	BONFIRE SUGAR MAPLE	B & B	3.5"CAL		
CC	9	CORNUS FLORIDA 'CHEROKEE CHIEF'	CHEROKEE CHIEF DOGWOOD	B & B	3.5"CAL		
QP	8	QUERCUS PHELLOS	WILLOW OAK	B & B	3.5"CAL		

SHRUBS	QTY	BOTANICAL NAME	COMMON NAME	ROOT	SIZE	REMARKS
CC2	14	CARYOPTERIS X CLANDONENSIS 'BLUE MIST'	BLUE MIST SPIREA	CONT.	18"-24" HT.	
CH	16	CLETHRA ALNIFOLIA 'HUMMINGBIRD'	SUMMERSWEET	CONT.	18"-24" HT.	
II	10	ILEX GLABRA 'COMPACTA'	COMPACT INKBERRY	CONT.	2'-2.5' HT.	
JS	20	JUNIPERUS CHINENSIS 'SARGENTII'	SARGANT JUNIPER	CONT.	18"-24" SPD.	
JF	14	JUNIPERUS CHINENSIS 'SEA GREEN'	SEA GREEN JUNIPER	B & B	3'-4' HT.	
JB	48	JUNIPERUS SQUAMATA 'BLUE STAR'	BLUE STAR JUNIPER	CONT.	15"-18" SPD.	
MP	11	MYRICA PENSYLVANICA	NORTHERN BAYBERRY	B & B	3'-4' HT.	
PC	8	PRUNUS X CISTENA	PURPLE LEAF SAND CHERRY	B & B	4'-5' HT.	
SG	18	SPIRAEA X BUMALDA 'GOLDFLAME'	GOLDFLAME SPIREA	CONT.	18"-24" HT.	
VA	10	VIBURNUM RHYTIDOPHYLLUM 'ALLEGHANY'	LEATHERLEAF VIBURNUM	B & B	5'-6' HT	
IG	123	ILEX GLABRA	INKBERRY HOLLY			#5 CAN
INS	18	ILEX X 'NELLIE R. STEVENS'	NELLIE STEVENS HOLLY	B & B	4-5'	
VR	25	VIBURNUM X RHYTIDOPHYLLUM	LEATHERLEAF VIBURNUM	B & B	3-4'	
PXOL	41	PRUNUS LAUROCERASUS 'OTTO LUYKEN'	OTTO LUYKEN CHERRY LAUREL		24-30"	#3 CAN
VD	64	VIBURNUM DENTATUM	ARROWOOD VIBURNUM	B & B	3-4'	

GRASSES	QTY	BOTANICAL NAME	COMMON NAME	ROOT	SIZE	REMARKS
PH	51	PENNISETUM ALOPECUROIDES 'HAMELN'	HAMELN DWARF FOUNTAIN GRASS	1 GAL		

GROUND COVERS	QTY	BOTANICAL NAME	COMMON NAME	CONT	SPACING	REMARKS
HO	56	HEMEROCALLIS X 'STELLA DE ORO'	STELLA DE ORO DAYLILY	1 GAL	18" O.C.	
SA	4	SEDUM X 'AUTUMN JOY'	AUTUMN JOY SEDUM	1 GAL	18" O.C.	

NOTE: LANDSCAPE IMPROVEMENTS SHALL BE MAINTAINED AND GUARANTEED IN A HEALTHY AND SOUND CONDITION OR OTHERWISE BE REPLACED BY EQUIVALENT IMPROVEMENTS FOR A PERIOD OF AT LEAST 2 YEARS FOLLOWING INSTALLATION.

SEE SHEET 22 OF 35 FOR LANDSCAPE REQUIREMENTS, NOTES AND DETAILS

GRAPHIC SCALE

-40 0 20 40 80 160

(IN FEET)
1 INCH = 40 FT.

THIS PLAN SET IS FOR PERMITTING PURPOSES ONLY AND MAY NOT BE USED FOR CONSTRUCTION

Date	Comments	By
08/03/20	REV. PER TOWNSHIP ENGINEER & SEWER COMMENTS	RND

DYNAMIC ENGINEERING
LAND DEVELOPMENT CONSULTING • PERMITTING • GEOTECHNICAL • ENVIRONMENTAL • SURVEY • PLANNING & ZONING
1904 Main Street, Lake Como, NJ 07719 T: 732.974.0198 F: 732.974.3521 www.dynamicec.com
Additional offices conveniently located at:
Chester, New Jersey T: 908.879.9229 | Toms River, New Jersey T: 732.974.0198 | Newtown, Pennsylvania T: 267.685.0276
Allen, Texas T: 972.534.2100 | Austin, Texas T: 512.646.2646 | Houston, Texas T: 281.789.6400
Delray Beach, Florida T: 561.921.8570

TITLE: LANDSCAPE PLAN

PROJECT: **VOORHEES ROUTE 73 DEVELOPMENT GROUP, LLC**
PROPOSED WAWA FOOD MARKET & FUELING STATION
BLOCK 36, LOT 11 & BLOCK 220, LOTS 9 & 16
NJSH ROUTE 73 AND KRESSON ROAD (CR 671)
TOWNSHIP OF EVESHAM (BURLINGTON COUNTY) & TOWNSHIP OF VOORHEES (CAMDEN COUNTY) NEW JERSEY

JOB No: 0744-12-010
DATE: 12/10/19
DRAWN BY: KTK
SCALE: (H) 1"=40' (V)
DESIGNED BY: MS
CHECKED BY: MAW
SHEET No: 21 OF 35

MATTHEW SHARO — PROFESSIONAL ENGINEER
MARK A. WHITAKER — PROFESSIONAL ENGINEER
CONSTRUCTION CHECK — DATE
CONSTRUCTION CHECK — DATE

LANDSCAPING STANDARDS

SHALL BE SUITABLE TO THE SITE'S MICROCLIMATE, BE APPROPRIATE FOR THE INTENDED FUNCTION, BE PROPORTIONAL
INIMIZE THE AMOUNT OF MAINTENANCE REQUIRED. SHADE AND STREET TREES MAY BE SELECTED FROM THE LIST OF
MMENDED STREET TREES,". SHRUBS AND OTHER PLANTINGS MAY BE SELECTED FROM THOSE RECOMMENDED IN A
OK, SUCH AS "SHRUBS AND VINES FOR AMERICAN GARDENS, BY DONALD WYMAN" (NEW YORK: MACMILLIAN, 1969) OR
ACCEPTABLE TO THE PLANNING BOARD. (§62-56.C.1) **(COMPLIES)**
OCK, IMPEDE OR INTERFERE WITH THE SAFE USE, OPERATION OR MAINTENANCE OF ROADWAYS, SIDEWALKS, SIGHT
LIGHTING. TREES SHALL BE OFFSET A MINIMUM OF 10 FEET FROM UTILITY LINES AND 15 FEET FROM OVERHEAD
SHALL NOT BE OF AN INVASIVE NATURE, WEEDY OR BRITTLE CHARACTER, EASILY SUSCEPTIBLE TO PEST INFESTATIONS
SSESS HAZARDOUS CHARACTERISTICS (BEE-ATTRACTING, POISONOUS, THORNY) WHEN USED IN AREAS DESIGNATED FOR
.C.2) **(COMPLIES)**
RANSPLANTED MATERIAL. ALL PROPOSED PLANT MATERIALS SHALL BE NURSERY-GROWN, DISEASE-FREE, AND SHALL
RDS LISTED IN AMERICAN STANDARD FOR NURSERY STOCK, ANSI Z60.1, CURRENT EDITION, PUBLISHED BY THE
ANDSCAPE ASSOCIATION (ANLA). (§62-56.C.3) **(COMPLIES)**
NFORM TO THE FOLLOWING MINIMUM SIZES AND ROOT CONDITION: (§62-56.C.4)
ES SHALL HAVE A MINIMUM CALIPER OF THREE INCHES TO 3 1/2 INCHES, MEASURED SIX INCHES ABOVE GROUND
IEIGHT OF 13 FEET TO 15 FEET AT INSTALLATION. A MINIMUM OF 50% OF THE TREES SHALL BE NATIVE TO THE
KED TREES SHOULD BE IDENTIFIED AS SUCH IN THE PLANT LIST. MULTIPLE-TRUNKED TREES SHALL BE COUNTED AS
A) **(WAIVER – EVERGREEN TREES ARE 6-10' IN HEIGHT)**
ERING TREES SHALL HAVE A MINIMUM HEIGHT OF EIGHT TO 10 FEET AT INSTALLATION. MULTIPLE-TRUNKED TREES
S SUCH IN THE PLANT LIST. MULTIPLE-TRUNKED TREES SHALL BE COUNTED AS ONE TREE. (§62-56.C.4.B) **(NOT**

LL HAVE A MINIMUM HEIGHT OF SIX FEET AT INSTALLATION. (§62-56.C.4.C) **(COMPLIES)**
ES SHALL BE CONTAINED IN SOIL, AND SHALL BE BALLED AND BURLAPPED, EXCEPT AS OTHERWISE NOTED IN THIS
) **(COMPLIES)**
. BE A MINIMUM HEIGHT OF THREE FEET AT PLANTING. SPREADING SHRUBS SHALL BE A MINIMUM OF 18 INCHES IN
62-56.C.4.E) **(WAIVER – PROPOSED SHRUBS ARE LESS THAN 3 FEET IN HEIGHT AND 18 INCHES IN SPREAD BUT ARE
EXISTING VEGETATION)**
NNIALS, BULBS AND ANNUALS SHALL BE APPROPRIATE TO TYPE. (§62-56.C.4.F) **(COMPLIES)**
IES ARE ENCOURAGED TO AVOID MONOCULTURES, TO ENCOURAGE LONG LIVED SPECIES, AND TO PROMOTE WILDLIFE
PLANTINGS SHALL CONTAIN THE FOLLOWING MINIMUM SPECIES MIX: (§62-56.C.5) **(COMPLIES)**

	MINIMUM SPECIES	NUMBER OF SHRUBS	MINIMUM SPECIES
	1	1 TO 49	1
	2	50 TO 99	3
	3	OVER 100	4
	4		
	5		

AS THOSE MARGINALLY HARDY TO THE AREA OR THOSE WHICH HAVE AN UNUSUAL FORM, AND/OR NONVEGETATIVE
OR ROCK GARDENS, MAY BE INCORPORATED INTO REQUIRED PLANTING AREAS. HOWEVER, ONLY THOSE PLANTS,
H MEET THE ABOVE REQUIREMENTS MAY BE COUNTED TOWARD SATISFYING THE MINIMUM PLANTING REQUIREMENTS OF
6) **(COMPLIES)**
ENTS TO BE PROVIDED SHALL BE INSTALLED AND MAINTAINED BY ACCEPTED PRACTICES AS RECOGNIZED BY THE
ANDSCAPE ASSOCIATION. PLANTING AND MAINTENANCE OF VEGETATION SHALL INCLUDE, AS APPROPRIATE, BUT NOT
O, PROVISIONS FOR SURFACE MULCH, STAKING AND GUYING, IRRIGATION, FERTILIZATION, INSECT AND DISEASE CONTROL,
ING AND WATERING. (§62-56.C.7.A) **(COMPLIES)**
E ARRANGEMENTS ACCEPTABLE TO THE TOWNSHIP THAT ALL LANDSCAPE IMPROVEMENTS INSTALLED IN ACCORDANCE
BE GUARANTEED AND MAINTAINED IN A HEALTHY AND/OR SOUND CONDITION, OR OTHERWISE BE REPLACED BY
, FOR A PERIOD OF AT LEAST TWO YEARS FOLLOWING THEIR INSTALLATION. THE GUARANTEE PERIOD SHALL BE NOTED
.7.B) **(COMPLIES)**
RIOR TO COMMENCEMENT OF THE GUARANTEE PERIOD REQUIRED ABOVE, THE TOWNSHIP SHALL PERFORM AN
ED SITE FOR COMPLIANCE WITH THE APPROVED LANDSCAPE PLAN. FOLLOWING THIS INSPECTION, AN AS-BUILT
E FURNISHED TO THE TOWNSHIP BY THE APPLICANT. PROVIDED THE FINISHED SITE IS FOUND TO BE IN COMPLIANCE,
PERIOD SHALL COMMENCE FIVE DAYS FROM THE DATE OF INSPECTION. (§62-56.C.7.C) **(COMPLIES)**
POOR HEALTH OR LACKING NORMAL GROWTH HABIT DURING THE TWO-YEAR GUARANTEE PERIOD SHALL BE REPLACED
NTS, IN ACCORDANCE WITH THE APPROVED LANDSCAPE PLAN, WITHIN 60 DAYS OF BEING NOTIFIED BY THE TOWNSHIP,
NTING SEASON, IF NOTIFIED OUT OF SEASON. ALL REPLACEMENT PLANTS SHALL BE SUBJECT TO A NEW TWO-YEAR
56.C.7.D) **(COMPLIES)**
S IN HANGING BASKETS AND PLANTERS SHALL BE REPLACED WITHIN 10 DAYS OF BEING NOTIFIED BY THE TOWNSHIP.
)
E OR VANDALISM OF PLANTS OCCUR, THE APPLICANT SHALL REPLACE THE DAMAGED PLANT MATERIAL IN ACCORDANCE
APPROVED MODIFIED LANDSCAPE PLAN. (§62-56.C.7.F) **(COMPLIES)**
REQUIRED TO ESCROW SUFFICIENT FUNDS FOR THE MAINTENANCE AND/OR REPLACEMENT OF THE PROPOSED
MPENSATORY PLANTINGS, DURING THE TWO-YEAR GUARANTEE PERIOD. THE ESCROW AMOUNT SHALL BE EQUIVALENT TO
THE COST ESTIMATE SUBMITTED WITH THE APPROVED LANDSCAPE PLAN. IN ADDITION, AN ESCROW SHALL BE REQUIRED
G DISTURBED BY CONSTRUCTION ACTIVITIES AND/OR TRANSPLANTED PLANTS, THAT ARE BEING USED TO SATISFY THE
NTAINED IN THIS CHAPTER OR IN CHAPTER 160, ZONING. THIS AMOUNT SHALL BE EQUIVALENT TO 110% OF THE
H NURSERY-GROWN STOCK, BASED ON THE NUMBER OF TREE CREDITS RECEIVED FOR EACH EXISTING TREE OR
S NOT REQUIRED FOR EXISTING PRESERVED TREES OUTSIDE THE CONSTRUCTION LIMITS, OR FOR TRANSPLANTED
TO SATISFY THE MINIMUM REQUIREMENTS OF THIS CHAPTER OR CHAPTER 160, ZONING. (§62-56.C.7.G) **(COMPLIES)**
OF ALL CUTS AND FILLS AND/OR TERRACES SHALL BE SUFFICIENT TO PREVENT EROSION, AND ALL ROADWAY
E FOOT VERTICAL TO THREE FEET HORIZONTAL SHALL BE PLANTED WITH GROUND COVERS APPROPRIATE FOR THE
IONS, WATER AVAILABILITY, AND ENVIRONMENT. (§62-56.D.3) **(COMPLIES)**
ERTY NOT UTILIZED BY BUILDINGS OR PAVED SURFACES SHALL BE LANDSCAPED UTILIZING COMBINATIONS OF EXISTING
S, LAWNS, GROUND COVER, MULCH, FENCING, ROCK FORMATIONS, ARTWORKS, AND GRADING. IN ALL DEVELOPMENTS, A
R ACRE SHALL BE PROVIDED. (§62-56.D.4) **(COMPLIES)**
EQUIRED ALONG ALL EXISTING OR PROPOSED PUBLIC OR PRIVATE STREETS WHEN THEY ABUT OR LIE WITHIN THE
SITE PLAN, AND ARE IN ADDITION TO OTHER REQUIRED PLANTINGS. (§62-56.H.1) **(COMPLIES)**
PLY WITH THE SIZE AND SPACING REQUIREMENTS BELOW. A MINIMUM OF 50% OF THE PROPOSED STREET TREES
REGION. REFER TO "EVESHAM TOWNSHIP RECOMMENDED SHADE AND STREET TREES". (§62-56.H.3) **(WAIVER – ALL
FEET AND NOT SPACED AT AN INTERVAL OF 20 FEET)**

	PLANTING INTERVAL (FEET)
	40
	30
	20

IGHT-OF-WAY OR PAVEMENT FRONTAGE SHALL BE DIVIDED BY THE PLANTING INTERVAL, WITHOUT DEDUCTING THE
OR CROSSWALKS. FRACTIONS SHALL BE ROUNDED UP. TREES SHALL BE DISTRIBUTED ALONG THE ENTIRE PLANTING
D NOT BE EVENLY SPACED. (§62-56.H.4) **(WAIVER – ALL TREES ARE LESS THAN 30 FEET AND NOT SPACED AT AN**

ILITERATION OF SECTIONS OF TREES BY DISEASE OR INSECT INFESTATION, A VARIETY OF TREES SHALL BE USED IN
G. SPECIES MIX SHALL CONFORM TO SUBSECTION C(5) ABOVE. STREET TREE SPECIES MAY BE ALTERNATED AT THE
OWEVER, THIS DOES NOT PRECLUDE THE LIMITED USE OF A SINGULAR SPECIES OF TREE TO CREATE A STRONG
ERAL, NO MORE THAN 20 TREES IN A ROW OR IN A CLUSTER SHOULD BE OF THE SAME SPECIES, UNLESS
2-56.H.5) **(COMPLIES)**
TO CREATE A SPECIAL EFFECT (I.E., COLUMNAR TREES SPACED 15 FEET ON CENTER AT A DEVELOPMENT ENTRY) MAY
-BY-CASE BASIS, WHEN APPROVED BY THE PLANNING BOARD. (§62-56.H.7) **(COMPLIES)**
SO AS NOT TO INTERFERE WITH THE INSTALLATION AND MAINTENANCE OF SIDEWALKS AND UTILITIES, IN ACCORDANCE
LINES: (§62-56.H.8)
CLOSER THAN 10 FEET TO A SIDEWALK, ROOT BARRIERS SHALL BE PLACED ALONG THE TREE SIDE OF THE
CE OF 12 FEET, CENTERED ON THE TRUNK. ROOT BARRIERS ARE NOT REQUIRED ALONG THE CURB;
ES)
GROUND UTILITIES; AND (§62-56.H.8.B) **(COMPLIES)**
ERHEAD UTILITIES, UNLESS THE USE OF SMALL SHADE OR ORNAMENTAL TREES IS APPROVED.

MENT MAY BE WAIVED WHERE EXISTING PRESERVED VEGETATION IS CONSIDERED SUFFICIENT TO MEET THESE
SONABLY ASSURED OF CONTINUED SURVIVAL. (§62-56.H.9) **(COMPLIES)**
GLE-FAMILY AND TWO-FAMILY DWELLING UNITS, A SCREEN PLANTING, BERM, FENCE, WALL OR COMBINATION THEREOF,
IN HEIGHT, MEASURED FROM THE CENTER LINE OF THE ADJACENT STREET, SHALL BE PROVIDED BETWEEN THE
S AND ANY LOT LINE OR STREET LINE EXCEPT WHERE A BUILDING INTERVENES OR WHERE THE DISTANCE BETWEEN
LINE OR STREET LINE IS GREATER THAN 150 FEET. (§62-56.I.1) **(COMPLIES)**
OF THE TOTAL AREA DEVOTED TO VEHICULAR USE, INCLUDING PARKING, ACCESS LANES AND SERVICE DRIVES, SHALL
NG ISLANDS, DIVIDER STRIPS AND/OR BUILDING FOUNDATION PLANTINGS. SUCH LANDSCAPED AREAS SHALL BE
THE VEHICULAR USE AREA, OR ALONG THEIR PERIMETER, IN ORDER TO BREAK THE VIEW OF PARKED VEHICLES IN A
BILITY. (§62-56.I.2) **(COMPLIES)**
E DISTRIBUTED THROUGHOUT THE PARKING LOT, ACCORDING TO ONE OF THESE TWO FORMULAS: (§62-56.I.3.A)
A MINIMUM OF NINE FEET WIDE BY 18 FEET LONG, SPACED NOT MORE THAN 180 FEET APART, OR
INGLE OR DOUBLE BAYS; OR (§62-56.I.3.A.1) **(NOT APPLICABLE)**
A MINIMUM OF FOUR FEET SQUARE, SPACED NOT MORE THAN 45 FEET APART, OR EVERY FIVE
S. THESE ARE TO BE PLACED AT AN ANGLE OF 45° TO THE STALLS, AT THE CONJUNCTION OF FOUR
SLANDS 18 FEET IN WIDTH SHALL BE PROVIDED AT THE ENDS OF ROWS IN WHICH DIAMOND TREE PITS
APPLICABLE)
D OPPOSITE EACH OTHER IN ADJACENT ROWS OF PARKING, TO REDUCE THE NUMBER OF RAISED ISLANDS, AND TO
BLE FOR TREE ROOTS. (§62-56.I.3.B) **(NOT APPLICABLE)**
N A ROW SHALL BE SEPARATED FROM DRIVE AISLES BY A PLANTING ISLAND, A MINIMUM OF NINE FEET IN WIDTH.
PROPOSED PARKING ADJACENT TO BUILDING IS SEPARATED FROM DRIVE AISLE BY STRIPING)
LL CONTAIN ONE SHADE TREE PLUS SHRUBS, GROUND COVER, PERENNIALS AND/OR MULCH TO COVER THE ENTIRE
T 50% OF THE PROPOSED SHADE TREES SHALL BE NATIVE TO THE REGION. SHRUBS SHALL BE MAINTAINED AT A
FEET. (§62-56.I.3.D) **(NOT APPLICABLE)**
PLACED AT EVERY OTHER BAY OF PARKING, RUNNING THE LENGTH OF THE ROWS OF PARKING, AND BE LANDSCAPED
ORNAMENTAL, AND/OR FLOWERING TREES, PLUS SHRUBS, GROUND COVER AND/OR MULCH TO COVER THE ENTIRE
OF PARKING" IS THE WIDTH OF PAVEMENT NEEDED TO ACCOMMODATE EITHER ONE OR TWO ROWS OF PARKING
LANE. (§62-56.I.4.A) **(NOT APPLICABLE)**
A MINIMUM OF 10 FEET WIDE, UNLESS A SIDEWALK IS PROPOSED WITHIN THE DIVIDER STRIP, THEN THE DIVIDER STRIP
DTH BY SIX FEET. AN APPROVED ROOT BARRIER SHALL BE PLACED ALONG THE TREE SIDE OF THE SIDEWALK FOR A
ITERED ON THE TRUNK. (§62-56.I.4.B) **(NOT APPLICABLE)**
TREES REQUIRED SHALL BE CALCULATED AT ONE TREE PER 30 FEET OF DIVIDER-STRIP
NDS. TWO ORNAMENTAL TREES MAY BE SUBSTITUTED FOR ONE SHADE TREE, FOR UP TO 50% OF THE
NOT BE SPACED EVENLY APART; HOWEVER, THE MAXIMUM SPACING SHALL BE 50 FEET.
E)
S SHALL BE CALCULATED AT ONE SHRUB PER 10 FEET OF DIVIDER STRIP, EXCLUSIVE OF END ISLANDS.
RDING TO SIZE, BUT NOT MORE THAN FIVE FEET APART. GAPS MAY BE PLACED BETWEEN THE
REAS FOR GROUND COVERS, DECORATIVE MULCH BEDS, ARTWORK, CROSSWALKS, OR FLOWERING PLANTS.
ENDS OF THE STRIPS SHALL NOT EXCEED 2 1/2 FEET IN HEIGHT, SO AS NOT TO BLOCK VISIBILITY. THIS
CLUDE THE USE OF TALLER SHRUBS ELSEWHERE WITHIN THE DIVIDER ISLAND. (§62-56.I.4.B.2) **(NOT**

FENCE, BERM, WALL, PLANTING OR COMBINATION THEREOF AND SHALL NOT BE LESS THAN EIGHT FEET IN HEIGHT. (§62-56.I.7) **(COMPLIES)**

FF. TO PREVENT CONFLICTS WITH THE OPENING AND CLOSING OF AUTOMOBILE DOORS, AND TO REDUCE DAMAGE FROM AUTOMOBILE OVERHANGS, ALL SHRUB PLANTINGS IN PARKING LOT ISLANDS AND DIVIDER STRIPS LOCATED ADJACENT TO OR ABUTTING PARKING STALLS SHALL BE SET BACK A MINIMUM OF TWO FEET FROM THE CURB OR EDGE OF PAVEMENT. (§62-56.I.8) **(COMPLIES)**

GG. PLANTINGS REQUIRED WITHIN THE PARKING AREAS ARE EXCLUSIVE OF OTHER PLANTING REQUIREMENTS SUCH AS STREET TREES, BUFFER AND COMPENSATORY PLANTINGS. (§62-56.I.9) **(COMPLIES)**

HH. PLANTINGS ARE REQUIRED FOR ALL SIDES OF A NON-SINGLE-FAMILY RESIDENTIAL BUILDING FACING PARKING LOTS OR AREAS INTENDED PRIMARILY FOR PEDESTRIAN USE. PLANTINGS ARE NOT REQUIRED ALONG THE SIDES OF BUILDINGS CONTAINING SERVICE OR LOADING AREAS, UNLESS THEY ALSO FACE PARKING AREAS. IF PART OF A SIDE OF THE BUILDING FACES PARKING, ONLY THAT PORTION IS SUBJECT TO THESE REQUIREMENTS. (§62-56.J.1) **(WAIVER – LANDSCAPING NOT PROPOSED AROUND THE PERIMETER OF THE BUILDING ADJACENT TO THE PARKING AREA)**

II. PLANTINGS ARE REQUIRED FOR ALL SIDES OF A NON-SINGLE-FAMILY RESIDENTIAL BUILDING FACING A STREET RIGHT-OF-WAY. (§62-56.J.2) **(WAIVER – LANDSCAPING NOT PROPOSED ALONG FRONT FAÇADE OF BUILDING FACING NJSH ROUTE 73)**

JJ. PLANTINGS SHALL FRONT A MINIMUM OF 50% OF THE LENGTH OF THE BUILDING AND ANY OUTDOOR RETAIL, CAFE OR OCCUPIED AREAS. SCREEN PLANTINGS ARE NOT REQUIRED IN FRONT OF OUTDOOR SALES OR CAFE AREAS; HOWEVER, CONSIDERATION SHOULD BE GIVEN TO PLACING SOME OF THE REQUIRED TREES IN FRONT OF THESE AREAS. (§62-56.J.3) **(WAIVER – LANDSCAPING NOT PROPOSED ALONG PERIMETER OF BUILDING)**

KK. THE MINIMUM PLANTING REQUIREMENT SHALL BE ONE SHADE TREE PLUS SIX SMALL SHRUBS PER 20 FEET OF BUILDING FACADE, OUTDOOR RETAIL, CAFE OR OTHER OCCUPIED AREAS TO ALLOW FOR DESIGN FLEXIBILITY, THE FOLLOWING SUBSTITUTIONS MAY BE MADE: (§62-56.J.4) **(WAIVER – LANDSCAPING NOT PROPOSED ALONG PERIMETER OF BUILDING)**

I. UP TO 50% OF THE REQUIRED QUANTITY OF SHADE TREES MAY BE SUBSTITUTED WITH TWO ORNAMENTAL OR EVERGREEN TREES, OR SIX SHRUBS, PER SHADE TREE. (§62-56.J.4.A) **(NOT APPLICABLE)**

II. UP TO 25% OF THE REQUIRED QUANTITY OF SHRUBS MAY BE SUBSTITUTED WITH ONE ORNAMENTAL GRASS, CAPABLE OF REACHING A MATURE HEIGHT OF AT LEAST THREE FEET, OR TWO GROUND COVER SHRUBS OR PERENNIALS; OR PERMANENT, PLANTED HANGING BASKET(S), CONTAINING LIVING PLANTS, WITH A COMBINED MINIMUM DIAMETER OF 24 INCHES, SUPPORTED ON A DECORATIVE POST OR ATTACHED TO THE BUILDING WALL, PER SMALL SHRUB. (§62-56.J.4.B) **(NOT APPLICABLE)**

LL. PLANTINGS MAY BE PLACED IN A LAWN AREA, TREE PITS, PLANTERS, OR HANGING BASKETS AS APPROPRIATE TO THE CHARACTER OF THE DEVELOPMENT, USING THE FOLLOWING GUIDELINES AS TO PLACEMENT: (§62-56.J.5) **(COMPLIES)**

I. SHADE TREES SHALL BE PLACED AT LEAST 15 FEET FROM A BUILDING WALL. ORNAMENTAL AND EVERGREEN TREES SHALL BE PLACED AT LEAST FIVE FEET FROM A BUILDING WALL. (§62-56.J.5.A) **(NOT APPLICABLE)**

II. IF ANY TREE IS LOCATED CLOSER THAN 10 FEET TO A SIDEWALK, APPROVED ROOT BARRIERS SHALL BE PLACED ALONG THE TREE SIDE OF THE SIDEWALK FOR A DISTANCE OF 12 FEET, CENTERED ON THE TRUNK. (§62-56.J.5.B) **(COMPLIES)**

III. PLANTERS SHALL BE AT LEAST 30 INCHES HIGH, BUT NO HIGHER THAN 42 INCHES, AND CONTAIN DRAINAGE HOLES. (§62-56.J.5.C) **(NOT APPLICABLE)**

IV. THE BOTTOMS OF HANGING BASKETS SHALL BE AT LEAST EIGHT FEET ABOVE THE SIDEWALK SURFACE, TO PROVIDE FOR PEDESTRIAN CLEARANCE AND CLEAR VISIBILITY. (§62-56.J.5.D) **(NOT APPLICABLE)**

TOWNSHIP OF VOORHEES:

A. LANDSCAPING CONSISTING OF EVERGREEN PLANTINGS SHALL BE PLANTED IN FRONT OF ALL FENCES FIVE FEET AND HIGHER THAT PARALLEL THE FRONT PROPERTY LINE. SUCH PLANTINGS SHALL BE A MINIMUM OF THREE FEET HIGH, AS MEASURED FROM GRADE LEVEL, AT THE TIME OF PLANTING, AND THERE SHALL BE A MAXIMUM SPACING OF SIX FEET APART, CENTER TO CENTER, BETWEEN EVERGREENS. THE LANDSCAPING REQUIRED IN FRONT OF FENCES SHALL BE INSTALLED WITHIN 30 DAYS AFTER THE FENCE HAS BEEN INSTALLED. (§150.14.B.3.F.1) **(NOT APPLICABLE)**

B. ALL BUFFER AND OTHER LANDSCAPING AREAS SHALL BE PLANTED AND MAINTAINED WITH EITHER GRASS OR GROUND COVER, TOGETHER WITH TREES AND SHRUBS, AND THE FOLLOWING CRITERIA SHALL BE USED AS A GUIDELINE: (§154.006.A.5) **(COMPLIES)**
I. SHRUBS SHALL BE AT LEAST THREE FEET IN HEIGHT WHEN PLANTED AND BE OF SUCH DENSITY AS WILL OBSCURE, THROUGHOUT THE COURSE OF THE YEAR, THE GLARE OF HEADLIGHTS. DECIDUOUS TREES SHALL HAVE A MINIMUM CALIPER OF TWO AND ONE HALF TO THREE INCHES. EVERGREEN TREES SHALL BE AT LEAST FIVE FEET IN HEIGHT WHEN PLANTED. (§154.006.A.5.A) **(WAIVER – PROPOSED SHRUBS ARE LESS THAN 3 FEET IN HEIGHT BUT ARE NOT REQUIRED DUE TO EXISTING VEGETATION)**

C. NOTWITHSTANDING ANYTHING ELSE CONTAINED IN TITLE 15, IF THE AREA REQUIRED FOR ANY SETBACK, INCLUDING ALL BUFFER AREAS, ADJACENT TO A RESIDENTIALLY ZONED PROPERTY CONTAIN PRE-EXISTING NATURAL VEGETATION, TREES, SHRUBS OR OTHER BUFFER-TYPE MATERIALS, THE ENTIRE REQUIRED SETBACK AREA ADJACENT TO THE RESIDENTIALLY ZONED PROPERTY SHALL BE MAINTAINED, AS MUCH AS POSSIBLE, IN ITS NATURAL, PRE-EXISTING STATE. ANY DISTURBANCE OF SUCH AREA REQUIRED DURING CONSTRUCTION MUST BE RESTORED WITH THE PLANTING OF ADDITIONAL, SIMILAR TREES AND SHRUBS (§154.006.A.6) **(COMPLIES)**

D. THE REVIEWING BOARD MAY GRANT A VARIANCE FROM THE REQUIRED MINIMUM BUFFER WIDTH SET FORTH IN CHAPTER 152 IF, BASED UPON THE EXCEPTIONAL NARROWNESS, TOPOGRAPHY OR OTHER NATURAL FEATURES OF THE LAND OR CONDITIONS AND CIRCUMSTANCES BEYOND THE REASONABLE CONTROL OF THE APPLICANT OR THE PROPERTY OWNER, STRICT CONFORMANCE WITH SUCH REQUIREMENT WOULD SEVERELY LIMIT THE REASONABLE USE AND DEVELOPMENT OF SUCH PROPERTY. SUCH VARIANCE MAY BE GRANTED ONLY IF OTHER IMPROVEMENTS (SUCH AS FENCING OR BERMS) OR ADDITIONAL LANDSCAPING IS PROVIDED IN THE FINALLY APPROVED BUFFER AREA SO AS TO SATISFY THE PURPOSE AND INTENT OF THE BUFFER REQUIREMENT. (§154.006.A.7) **(COMPLIES)**

E. LANDSCAPING IN THE AREA OF ALL CUTS AND FILLS AND/OR TERRACES SHALL BE SUFFICIENT TO PREVENT EROSION, AND ALL ROADWAY SLOPES STEEPER THAN ONE FOOT VERTICALLY TO THREE FEET HORIZONTALLY SHALL BE PLANTED WITH GROUND COVERS APPROPRIATE FOR THE PURPOSE AND SOIL CONDITIONS, WATER AVAILABILITY, AND ENVIRONMENT. (§154.006.B.3) **(COMPLIES)**

F. IN NONRESIDENTIAL DEVELOPMENTS, ALL AREAS OF THE SITE NOT OCCUPIED BY BUILDINGS AND IMPROVEMENTS SHALL BE LANDSCAPED BY THE PLANTING OF GRASS OR OTHER GROUND COVER, SHRUBS, AND TREES AS PART OF A SITE PLAN APPROVED. (§154.006.B.4) **(COMPLIES)**

G. ONLY NURSERY-GROWN PLANT MATERIALS SHALL BE ACCEPTABLE; AND ALL TREES, SHRUBS, AND GROUND COVERS SHALL BE PLANTED ACCORDING TO ACCEPTED HORTICULTURAL STANDARDS. (§154.006.B.5) **(COMPLIES)**

H. THE PLANT SPECIES SELECTED SHOULD BE HARDY FOR THE CLIMATIC ZONE AND APPROPRIATE IN TERMS OF FUNCTION AND SIZE. (§154.006.B.6) **(COMPLIES)**

I. PLANTINGS SHALL BE WATERED REGULARLY AND IN A MANNER APPROPRIATE FOR THE SPECIFIC PLANT SPECIES THROUGH THE FIRST GROWING SEASON, AND DEAD OR DYING PLANTS SHALL BE REPLACED BY THE APPLICANT DURING THE NEXT PLANTING SEASON. (§154.006.B.7) **(COMPLIES)**

J. IN PARKING LOTS, AT LEAST 5% OF THE INTERIOR PARKING AREA SHALL BE LANDSCAPED WITH PLANTINGS, AND ONE TREE FOR EACH 10 SPACES SHALL BE INSTALLED. PARKING LOT STREET FRONTAGE SCREENING AND PERIMETER SCREENING SHALL BE A MINIMUM OF FIVE FEET WIDE. PLANTING REQUIRED WITHIN THE PARKING LOT IS EXCLUSIVE OF OTHER PLANTING REQUIREMENTS. (§154.006.B.8) **(COMPLIES)**

K. FOR REFUSE AND RECYCLING AREAS, LANDSCAPING CONSISTING OF SIX-FOOT-HIGH EVERGREEN TREES SHALL BE INSTALLED TO SCREEN THE PERIMETER OF THE MASONRY WALLS. (§154.006.D.3) **(WAIVER – NO SCREENING PROPOSED AROUND PERIMETER OF TRASH ENCLOSURE)**

L. ALL LOADING AREAS SHALL BE LANDSCAPED AND SCREENED SUFFICIENTLY TO OBSCURE THE VIEW OF THE LOADING PLATFORM OR OTHER LOADING FACILITY FROM ANY PUBIC STREET, RESIDENTIAL USE OR ZONE AND THE FRONT YARDS OF ADJACENT COMMERCIAL OR INDUSTRIAL USE. SUCH SCREENING MAY CONSIST OF FENCING OR WALLS, AND SHALL BE IN CONFORMANCE WITH THE LANDSCAPING REQUIREMENTS OF THE TOWNSHIP CODE. (§154.010.B.7) **(COMPLIES)**

M. EACH ON-SITE PARKING FACILITY SHALL BE DESIGNED TO MINIMIZE THE REMOVAL OF ANY TREE IN EXCESS OF FIVE INCHES IN CALIPER. EACH FACILITY SHALL HAVE A MINIMUM OF 200 SQUARE FEET OF CONTIGUOUS LANDSCAPED AREA FOR EACH 30 SPACES OR PORTION THEREOF CONSISTING OF SHRUBS WITH A MATURE HEIGHT OF NOT MORE THAN THREE FEET AND DECIDUOUS TREES WITH BRANCHES NOT LESS THAN SEVEN FEET IN HEIGHT, BUT IN NO EVENT SHALL THERE BE LESS THAN THE AREA CONTAINED IN THE REQUIRED TRAFFIC ISLANDS. SUCH SPACE SHALL BE DISTRIBUTED THROUGHOUT THE PARKING AREAS IN ORDER TO VISUALLY BREAK THE VIEW OF LONG ROWS OF PARKED CARS IN A MANNER NOT IMPAIRING SIGHT TRIANGLES. (§154.010.B.8) **(COMPLIES)**

IRRIGATION NOTE:

CONTRACTOR TO PROVIDE AN IRRIGATION DESIGN FOR BOTH LAWN & BED AREAS. DESIGN IS TO BE SUBMITTED TO THE PROJECT LANDSCAPE ARCHITECT FOR REVIEW AND APPROVAL. CONTRACTOR TO VERIFY STATIC PRESSURE PRIOR TO DESIGN. CONTRACTOR IS ALSO RESPONSIBLE FOR ANY PRESSURE REDUCING DEVICES REQUIRED TO MEET MAXIMUM PRESSURE REQUIREMENT. SYSTEM DESIGN TO SHOW ALL VALVES, PIPING, HEADS, BACKFLOW PREVENTION, METERS AND CONTROLLERS. ALL SLEEVES IN PAVEMENT AREAS MUST BE SHOWN. THE CONTRACTOR SHALL BE RESPONSIBLE FOR BACKFLOW PREVENTION DEVICE INSTALLATION AND PERMITTING.

WAWA LANDSCAPING STANDARDS

1. ALL TOPSOIL SHALL BE A MINIMUM 4" IN ALL SOD AREAS AND 10" – 12" IN TREE, SHRUB AND GROUND COVER BEDS, INCLUDING PARKING LOT ISLAND BEDS. IT SHALL BE APPROVED BY A WAWA CONSTRUCTION REPRESENTATIVE, PRIOR TO INSTALLATION.
2. PLANTING BEHIND PERPENDICULAR PARKING IS TO BE LOCATED A MINIMUM OF 5' BEHIND THE CURB LINE.
3. ALL LANDSCAPE AND GRASS AREAS ARE TO BE HAND RAKED AND LEFT CLEAR OF ALL STONES, ROCK, CONSTRUCTION DEBRIS AND ANY UNSUITABLE MATERIALS.
4. ALL LANDSCAPE AND GRASS AREAS ARE TO BE IRRIGATED BY AUTOMATIC SPRINKLER SYSTEM. (WAWA TO PROVIDE IRRIGATION DESIGN PLANS TO LANDSCAPE CONTRACTOR.)
5. LANDSCAPE CONTRACTOR WILL LOCATE ALL UNDERGROUND UTILITIES PRIOR TO ANY EXCAVATION AND PLANTING INSTALLATION.
6. ALL AREAS TO BE LANDSCAPED OR COVERED WITH STONE MUST BE TREATED WITH A PRE-EMERGENCE HERBICIDE (SURFLAN, DACTAL OR APPROVED EQUAL) IN ACCORDANCE WITH APPLICABLE FEDERAL, STATE REGULATIONS AND THE MANUFACTURER'S INSTRUCTIONS.
7. MULCH BEDS ARE TO BE DELINEATED WITH HAND OR MACHINE DUG SHOVEL EDGING.
8. RIVER ROCK BEDS ARE TO BE DELINEATED WITH 5 ⅜" ALUMINUM LANDSCAPE EDGING, STAKED AT 3' INTERVALS. ALUMINUM EDGING IS TO BE CLEANLINE 3/16" X 5 ⅜" X 16' BY PERMALOC. (800-356-9660, //WWW.PERMALOC.COM.) FOLLOW MANUFACTURERS INSTALLATION DIRECTIONS INCLUDED AT THE END OF THIS SECTION.
9. LANDSCAPE CONTRACTOR TO SUPPLY AND INSTALL A PERVIOUS WEED BARRIER (DEWITT, DUPONT OR APPROVED EQUAL) IN ACCORDANCE WITH MANUFACTURER'S INSTRUCTIONS WITHIN ALL LANDSCAPES, INCLUDING STONE AND MULCH BEDS. ALL WEED BARRIER WILL BE OVERLAPPED A MINIMUM OF 6" AT ALL SEAMS. AT PLANT LOCATIONS, BARRIER SHOULD BE CUT IN AN "X" PATTERN SO TO ACCOMMODATE ROOT BALL AND REPLACED AFTER PLANT HAS BEEN INSTALLED.
10. WEED BARRIER SHALL NOT BE VISIBLE IN AREAS DESIGNATED FOR STONE MULCH. WHEN STONE IS CALLED FOR ADJACENT TO CURB OR SIDEWALKS, IT SHALL BE FEATHERED DOWN TO CURB LEVEL FROM A DISTANCE 24" FROM THE CURB.
11. ALL PROPOSED LANDSCAPING TO BE NURSERY GROWN, TYPICAL OF THEIR SPECIES OR VARIETY. THEY ARE TO HAVE NORMAL VIGOROUS ROOT SYSTEMS, FREE FROM DEFECTS AND INFECTIONS AND IN ACCORDANCE WITH ANSI Z60.1
12. ALL PROPOSED PLANTINGS SHOULD BE INSTALLED PER STANDARDS OF THE "AMERICAN ASSOCIATION OF NURSERYMEN" AND STATE NURSERY/LANDSCAPE ASSOCIATIONS WITH REGARD TO PLANTING, PIT SIZE, BACKFILL MIXTURE, STAKING AND GUYING.
13. ALL PLANTING CONTAINERS AND BASKETS SHALL BE REMOVED DURING PLANTING. ALL PLANTS SHALL BE SET PLUMB AND POSITIONED SO THAT THE TOP OF THE ROOT COLLAR MATCHES, OR IS NO MORE THAN TWO (2") INCHES ABOVE, FINISHED GRADE. REPLACE AMENDED BACKFILL IN 6-INCH LAYERS AND COMPACT BACKFILL TO ELIMINATE VOIDS. CONTRACTOR SHALL PROVIDE A FOUR-INCH HIGH EARTHEN WATERING SAUCER ALONG THE PERIMETER OF EACH PLANTING PIT. CONTRACTOR SHALL WATER NEWLY PLANTED VEGETATION PRIOR TO MULCHING PLANTING PIT. ALL VOIDS SHALL BE FILLED AND SETTLING MITIGATED AS REQUIRED. ALUMINUM EDGING SHALL BE INSTALLED AROUND ALL PLANTING AREAS TO DELINEATE BETWEEN DIFFERENT LANDSCAPE MATERIALS.
14. AFTER INITIAL WATERING AND PRIOR TO MULCHING, CONTRACTOR SHALL APPLY HERBICIDES AND PRE-EMERGENT HERBICIDES AS REQUIRED TO ELIMINATE ANY WEED SEEDS OR PLANTS PRESENT ON ROOT BALL.
15. ALL PLANTING BEDS AND PITS EXCEPT FOR LANDSCAPE ISLANDS ADJACENT TO THE BUILDING AND DESIGNATED AREA AT THE FUEL VENT STACKS, SHALL BE MULCHED WITH DOUBLE GROUND HARDWOOD MULCH AT A MINIMUM DEPTH OF 3". LANDSCAPE ISLANDS ADJACENT TO THE TANK MAT SHALL BE MULCHED WITH 1"-3" "RIVER STONE" MULCH TO AT LEAST TO A DISTANCE OF 5' FROM THE TANK MAT AND VENT STACK.
16. SEEDBED PREPARATION
    A. APPLY LIMESTONE AND FERTILIZER ACCORDING TO SOIL TESTS OR FERTILIZER MAY BE APPLIED AT THE RATE OF 260 POUNDS PER ACRE OR 6 POUNDS PER 1000 SQUARE FEET USING 10-20-10 OR EQUIVALENT. IN ADDITION, 300 POUNDS 4-1-2 PER ACRE OR EQUIVALENT OF SLOW RELEASE NITROGEN MAY BE USED IN LIEU OF TOPDRESSING.
    B. WORK LIME AND FERTILIZER INTO THE SOIL AS PRACTICAL TO A DEPTH OF 4-INCHES WITH A DISC, SPRING TOOTH HARROW OR OTHER SUITABLE EQUIPMENT. THE FINAL HARROWING OR DISKING OPERATION SHOULD PARALLEL TO THE GENERAL CONTOUR. CONTINUE TILLAGE UNTIL A REASONABLE UNIFORM, FINE SEEDBED IS PREPARED. ALL BUT CLAY OR SILTY SOILS AND COARSE SANDS SHOULD BE ROLLED TO FIRM THE SEEDBED WHEREVER FEASIBLE.
    C. INSPECT SEEDBED JUST BEFORE SEEDING. IF TRAFFIC HAS LEFT THE SOIL COMPACTED, THE AREA MUST BE RETILLED AND FIRMED AS OUTLINED BELOW.
    D. UNLESS REQUIRED FOR PARTICULAR STORMWATER BEST MANAGEMENT PRACTICES AREAS, ALL TURF ON WAWA LEASED PREMISES IS TO BE SOD. WHEN REQUIRED FOR STORMWATER BEST MANAGEMENT PRACTICES, SEED MIX IS TO MEET LOCAL REQUIREMENTS. SOD SHALL BE TURF TYPE TALL FESCUE AND INSTALLED ON A MINIMUM OF 4" OF TOPSOIL.
17. PLANT MATERIAL SHALL BE GUARANTEED FOR TWO YEARS FROM THE DATE OF SUBSTANTIAL COMPLETENESS. THE CONTRACTOR SHALL REPLACE PLANTS, DEAD, UNHEALTHY, DYING OR DAMAGED THROUGH LOSS OF BRANCHES AND/OR FOLIAGE. LAWNS THAT ARE NOT IN GOOD CONDITION AT THE END OF THE GUARANTEE PERIOD SHALL BE REPAIRED UNTIL A GOOD LAWN RESULTS. IT IS UNDERSTOOD THAT THE OWNER SHALL ASSUME RESPONSIBILITY FOR WATERING ALL PLANT MATERIAL AND LAWN AREA BEGINNING WITH THE DATE OF SUBSTANTIAL COMPLETENESS.

PLANTING SPECIFICATIONS

1. SCOPE OF WORK
   A. THIS WORK SHALL CONSIST OF PERFORMING, CLEARING AND SOIL PREPARATION, FINISH GRADING, PLANTING AND DRAINAGE, INCLUDING ALL LABOR, MATERIALS, TOOLS, EQUIPMENT, AND ANY OTHER APPURTENANCES NECESSARY FOR THE COMPLETION OF THIS PROJECT.
2. MATERIALS
   A. GENERAL – ALL MATERIALS SHALL MEET OR EXCEED SPECIFICATIONS AS OUTLINED IN THE STATE DEPARTMENT OF TRANSPORTATION (D.O.T.) MANUAL OF ROADWAY AND BRIDGE CONSTRUCTION (LATEST EDITION) OR APPROVED EQUAL.
   B. PLANTS – ALL PLANTS SHALL BE HEALTHY OR NORMAL GROWTH, WELL ROOTED, FREE FROM DISEASE AND INSECTS.
   C. TOPSOIL – LOAMY SILT, HAVING AN ORGANIC CONTENT NOT LESS THAN 5%, pH RANGE BETWEEN 4.5 – 7, BE FREE OF DEBRIS, ROCKS LARGER THAN TWO INCHES (2"), WOOD, ROOTS, VEGETABLE MATTER AND CLAY CLODS.
   D. MULCH – FOUR (4") INCHES DOUBLE SHREDDED HARDWOOD BARK MULCH.
3. FERTILIZER AND SOIL CONDITIONER – PLANTED AREAS
   A. ORGANIC FERTILIZER – SHALL BE PROCESSED SEWER SLUDGE WITH MINIMAL CONTENT OF 1% NITROGEN AND 2% PHOSPHORIC ACID, EQUAL TO "NITROHUMUS".
   B. ORGANIC FERTILIZER AND SOIL CONDITIONER – SHALL BE "GRO-POWER" AND ORGANIC BASE MATERIALS COMPRISED OF DECOMPOSED ANIMAL AND VEGETABLE MATTER AND COMPOSTED TO SUPPORT BACTERIAL CULTURES, CONTAINING NO POULTRY OR HUMAN WASTE. GUARANTEED ANALYSIS (5-3-1): NITROGEN 5%, PHOSPHATE 3%, POTASH 1% 50% HUMUS AND 15% HUMIC ACIDS.
4. GENERAL WORK PROCEDURES
   A. LANDSCAPE WORK SHALL COMMENCE AS SOON AS THOSE PORTIONS OF THE SITE ARE AVAILABLE. CONTRACTOR TO UTILIZE WORKMANLIKE STANDARDS IN PERFORMING ALL LANDSCAPE CONSTRUCTION. THE SITE IS TO BE LEFT IN A CLEAN STATE AT THE END OF EACH DAY'S WORK. ALL DEBRIS, MATERIALS AND TOOLS SHALL BE PROPERLY STOCKPILED OR DISPOSED OF. ALL PAVED SURFACES SHALL BE SWEPT CLEAN AT THE END OF EACH DAYS WORK.
5. WEEDING
   A. BEFORE AND DURING PRELIMINARY GRADING AND FINISH GRADING, ALL WEEDS AND GRASSES SHALL BE DUG OUT BY THE ROOTS AND DISPOSED OF AT THE CONTRACTOR'S EXPENSE.
6. TOPSOILING
   A. CONTRACTOR TO PROVIDE A 6" THICK TOPSOIL LAYER IN ALL PLANTING AREAS. TOPSOIL SHOULD BE SPREAD OVER A PREPARED SURFACE IN A UNIFORM LAYER TO PRODUCE A 6" UNSETTLED THICKNESS. TOPSOIL PRESENT AT THE SITE, IF ANY, MAY BE USED TO SUPPLEMENT TOTAL AMOUNT REQUIRED. CONTRACTOR TO FURNISH AN ANALYSIS OF ON-SITE TOPSOIL UTILIZED IN ALL PLANTING AREAS. ADJUST pH AND NUTRIENT LEVELS AS REQUIRED TO ENSURE AN ACCEPTABLE GROWING MEDIUM.
7. SOIL CONDITIONING:
   A. CULTIVATE ALL AREAS TO BE PLANTED TO A DEPTH OF 6". ALL DEBRIS EXPOSED FROM EXCAVATION AND CULTIVATION SHALL BE DISPOSED OF AT THE CONTRACTOR'S EXPENSE. SPREAD EVENLY IN ALL PLANTING AREAS AND TILL (2 DIRECTIONS) INTO TOP 4" WITH THE FOLLOWING PER 1,000 SQ. FT.:
      20 POUNDS "GRO-POWER"
      100 POUNDS AGRICULTURAL GYPSUM
      20 POUNDS NITROFORM (COURSE) 38-0-0 BLUE CHIP

   SOIL MODIFICATIONS:
   A. THOROUGHLY TILL ORGANIC MATTER INTO THE TOP 6 TO 12 IN. OF MOST PLANTING SOILS TO IMPROVE THE SOIL'S ABILITY TO RETAIN WATER AND NUTRIENTS. USE COMPOSTED BARK, RECYCLED YARD WASTE OR PEAT MOSS. ALL PRODUCTS SHOULD BE COMPOSTED TO A DARK COLOR AND BE FREE OF PIECES WITH IDENTIFIABLE LEAF OR WOOD STRUCTURE. AVOID MATERIAL WITH A pH HIGHER THAN 7.5.
   B. MODIFY HEAVY CLAY OR SILT (MORE THAN 40% CLAY OR SILT) BY ADDING COMPOSTED PINE BARK (UP TO 30% BY VOLUME) AND/OR GYPSUM. COARSE SAND MAY BE USED IF ENOUGH IS ADDED TO BRING THE SAND CONTENT TO MORE THAN 60% OF THE TOTAL MIX. IMPROVE DRAINAGE IN HEAVY SOILS BY PLANTING ON RAISED MOUNDS OR BEDS AND INCLUDING SUBSURFACE DRAINAGE LINES.
   C. MODIFY EXTREMELY SANDY SOILS (MORE THAN 85% SAND) BY ADDING ORGANIC MATTER AND/OR DRY, SHREDDED CLAY LOAM UP TO 30% OF THE TOTAL MIX.
8. PLANTING
   POSITION TREES AND SHRUBS AT THEIR INTENDED LOCATIONS AS PER THE PLANS AND SECURE THE APPROVAL OF THE LANDSCAPE ARCHITECT BEFORE EXCAVATING PITS, MAKING NECESSARY ADJUSTMENTS AS DIRECTED.
   A. PLANTING PITS SHALL BE DUG WITH LEVEL BOTTOMS, WITH THE WIDTH TWICE THE DIAMETER OF ROOT BALL. THE ROOT BALL SHALL REST ON UNDISTURBED GRADE. EACH PLANT PIT SHALL BE BACK FILLED WITH THE FOLLOWING PREPARED SOIL MIXED THOROUGHLY:
      1 PART PEAT MOSS BY VOLUME
      1 PART COW MANURE BY VOLUME
      3 PARTS TOPSOIL BY VOLUME
      21 GRAM "AGRIFORM" PLANTING TABLETS AS FOLLOWS:
      2 TABLETS PER 1 GAL. PLANT
      3 TABLETS PER 5 GAL. PLANT
      4 TABLETS PER 15 GAL. PLANT
      LARGER PLANTS (2) TWO TABLETS PER 1/2" DIAM. OF TRUNK CALIPER
   B. PREPARED SOIL SHALL BE TAMPED FIRMLY AT BOTTOM OF PIT. FILL PREPARED SOIL AROUND BALL OF PLANT 1/2 WAY, AND INSERT PLANT TABLETS. COMPLETE BACK FILL AND WATER THOROUGHLY.
   C. ALL PLANTS SHALL BE SET SO THAT, THEY BEAR THE SAME RELATION TO THE REQUIRED GRADE AS THEY BORE TO THE NATURAL GRADE BEFORE BEING TRANSPLANTED.
   D. PREPARE RAISED EARTH BASIN AS WIDE AS PLANTING HOLE OF EACH TREE.
   E. WATER IMMEDIATELY AFTER PLANTING. WATER SHALL BE APPLIED TO EACH TREE AND SHRUB IN SUCH MANNER AS NOT TO DISTURB BACK FILL AND TO THE EXTENT THAT ALL MATERIALS IN THE PLANTING HOLE ARE THOROUGHLY SATURATED.
   F. PRUNE ALL PROPOSED TREES DIRECTLY ADJACENT TO WALKWAYS TO A MIN. OF 7' BRANCHING HEIGHT.
9. GROUND COVER
   A. ALL GROUND COVER AREAS SHALL RECEIVE A 1/4" LAYER OF HUMUS RAKED INTO THE TOP 1" OF PREPARED SOIL PRIOR TO PLANTING GROUND COVER.
   B. SPACING AND VARIETY OF GROUND COVER SHALL BE AS SHOWN ON DRAWINGS.
   C. IMMEDIATELY AFTER PLANTING GROUND COVER, CONTRACTOR SHALL THOROUGHLY WATER GROUND COVER.
   D. ALL GROUND COVER AREAS SHALL BE TREATED WITH A PRE-EMERGENT BEFORE FINAL LANDSCAPE INSPECTION. GROUND COVER AREAS SHALL BE WEEDED PRIOR TO APPLYING PRE-EMERGENT. PRE-EMERGENT TO BE APPLIED AS PER MANUFACTURER'S RECOMMENDATION.
10. FINISH GRADING
   A. ALL AREAS WILL BE RECEIVED BY THE CONTRACTOR AT SUBSTANTIALLY PLUS/MINUS 1 FOOT OF FINISH GRADE.
   B. ALL LAWN AND PLANTING AREAS SHALL BE GRADED TO A SMOOTH, EVEN AND UNIFORM PLANE WITH NO ABRUPT CHANGE OF SURFACE, UNLESS OTHERWISE DIRECTED BY LANDSCAPE ARCHITECT. SOIL AREAS ADJACENT TO THE BUILDINGS SHALL SLOPE AWAY.
   C. ALL PLANTING AREAS SHALL BE GRADED AND MAINTAINED TO ALLOW FREE FLOW OF SURFACE WATER.
11. GUARANTEE
   A. CONTRACTOR SHALL GUARANTEE ALL PLANTS FOR A PERIOD OF TWO (2) YEARS FROM ACCEPTANCE OF JOB. OWNER TO SECURE A MAINTENANCE BOND FROM THE CONTRACTOR FOR TEN PERCENT (10%) OF THE VALUE OF THE LANDSCAPE INSTALLATION WHICH WILL BE RELEASED AT THE COMMENCEMENT OF THE GUARANTEE PERIOD AND PASSES A FINAL INSPECTION BY THE OWNER OR OWNERS REPRESENTATIVE.
12. CLEANUP
   A. UPON THE COMPLETION OF ALL PLANTING WORK AND BEFORE FINAL ACCEPTANCE, THE CONTRACTOR SHALL REMOVE ALL MATERIAL, EQUIPMENT, AND DEBRIS RESULTING FROM HIS WORK. ALL PAVED AREAS SHALL BE BROOM CLEANED AND THE SITE LEFT IN A NEAT AND ACCEPTABLE CONDITION AS APPROVED BY THE OWNER'S AUTHORIZED REPRESENTATIVE.
   B. MAINTAIN TREES, SHRUBS AND OTHER PLANTS BY PRUNING, CULTIVATING AND WEEDING AS REQUIRED FOR HEALTHY GROWTH. RESTORE PLANTING SAUCERS. TIGHTEN AND REPAIR STAKE AND GUY SUPPORTS AND RESET TREES AND SHRUBS TO PROPER GRADES OR VERTICAL POSITION AS REQUIRED. RESTORE OR REPLACE DAMAGED WRAPPINGS. SPRAY WITH HERBICIDE AS REQUIRED TO KEEP TREES AND SHRUBS FREE OF INSECTS AND DISEASE.
   C. MAINTAIN LAWNS BY WATERING, FERTILIZING, WEEDING, MOWING, TRIMMING, AND OTHER OPERATIONS SUCH AS ROLLING, REGRADING AND REPLANTING AS REQUIRED TO ESTABLISH A SMOOTH, ACCEPTABLE LAWN, FREE OF ERODED OR BARE AREAS.
13. MAINTENANCE (ALTERNATE BID) COST PER MONTH AFTER INITIAL 90-DAY MAINTENANCE PERIOD.

PLANTING NOTES

1. PLANT MATERIAL SHALL BE FURNISHED AND INSTALLED AS INDICATED; INCLUDING ALL LABOR, MATERIALS, PLANTS, EQUIPMENT, INCIDENTALS, AND CLEAN-UP.
2. THE CONTRACTOR SHALL BE RESPONSIBLE FOR PLANTING AT CORRECT GRADES AND ALIGNMENT. LAYOUT TO BE APPROVED BY LANDSCAPE ARCHITECT PRIOR TO INSTALLATION.
3. PLANTS SHALL BE TYPICAL OF THEIR SPECIES AND VARIETY; HAVE NORMAL GROWTH HABITS; WELL DEVELOPED BRANCHES, DENSELY FOLIATED, VIGOROUS ROOT SYSTEMS AND BE FREE FROM DEFECTS AND INJURIES.
4. CONTRACTOR SHALL REPORT ANY SOIL OR DRAINAGE CONDITIONS CONSIDERED DETRIMENTAL TO THE GROWTH OF PLANT MATERIAL.
5. ALL PLANT MATERIAL SHALL BE GUARANTEED BY THE CONTRACTOR TO BE IN VIGOROUS GROWING CONDITION. PROVISION SHALL BE MADE FOR A GROWTH GUARANTEE OF AT LEAST TWO (2) YEARS FROM THE DATE OF ACCEPTANCE FOR TREES AND SHRUBS. REPLACEMENTS SHALL BE MADE AT THE BEGINNING OF THE FIRST SUCCEEDING PLANTING SEASON. ALL REPLACEMENTS SHALL HAVE A GUARANTEE EQUAL TO THAT STATED ABOVE.
6. INSOFAR AS IT IS PRACTICABLE, PLANT MATERIAL SHALL BE PLANTED ON THE DAY OF DELIVERY. IN THE EVENT THIS IS NOT POSSIBLE, THE CONTRACTOR SHALL PROTECT STOCK NOT PLANTED. PLANTS SHALL NOT REMAIN UNPLANTED FOR LONGER THAN A THREE DAY PERIOD AFTER DELIVERY. ANY PLANTS NOT INSTALLED DURING THIS PERIOD WILL BE REJECTED.
7. QUALITY AND SIZE OF PLANTS, SPREAD OF ROOTS, AND SIZE OF BALLS SHALL BE IN ACCORDANCE WITH ANSI Z60.1 (REV. 2001) "AMERICAN STANDARD FOR NURSERY STOCK" AS PUBLISHED BY THE AMERICAN NURSERY & LANDSCAPE ASSOCIATION.
8. ALL PLANTS SHALL BE PLANTED IN AMENDED TOPSOIL THAT IS THOROUGHLY WATERED AND TAMPED AS BACK FILLING PROGRESSES. PLANTING MIX TO BE AS SHOWN ON PLANTING DETAILS. LARGE PLANTING AREAS TO INCORPORATE FERTILIZER AND SOIL CONDITIONERS AS STATED IN PLANTING SPECIFICATIONS.
9. PLANTS SHALL NOT BE BOUND WITH WIRE OR ROPE AT ANY TIME SO AS TO DAMAGE THE BARK OR BREAK BRANCHES. PLANTS SHALL BE HANDLED FROM THE BOTTOM OF THE BALL ONLY.
10. PLANTING OPERATIONS SHALL BE PERFORMED DURING PERIODS WITHIN THE PLANTING SEASON WHEN WEATHER AND SOIL CONDITIONS ARE SUITABLE AND IN ACCORDANCE WITH ACCEPTED LOCAL PRACTICE. PLANTS SHALL NOT BE INSTALLED IN TOPSOIL THAT IS IN A MUDDY OR FROZEN CONDITION. ALL PLANT MATERIAL SHALL BE SPRAYED WITH "WILT-PRUF" OR EQUAL AS PER MANUFACTURER'S INSTRUCTIONS.
11. NO PLANT, EXCEPT GROUND COVERS, SHALL BE PLANTED LESS THAN TWO FEET FROM EXISTING STRUCTURES AND SIDEWALKS.
12. SET ALL PLANTS PLUMB AND STRAIGHT. SET AT SUCH LEVEL THAT, A NORMAL OR NATURAL RELATIONSHIP TO THE CROWN OF THE PLANT WITH THE GROUND SURFACE WILL BE ESTABLISHED. LOCATE PLANT IN THE CENTER OF THE PIT.
13. ALL INJURED ROOTS SHALL BE PRUNED TO MAKE CLEAN ENDS BEFORE PLANTING UTILIZING CLEAN, SHARP TOOLS. IT IS ADVISABLE TO PRUNE APPROXIMATELY 1/3 OF THE GROWTH OF LARGE TREES (2" CALIPER AND OVER) BY THE REMOVAL OF SUPERFLUOUS BRANCHES, THOSE WHICH CROSS, THOSE WHICH RUN PARALLEL, ETC. MAIN LEADER OF TREES WILL NOT BE CUT BACK. LONG SIDE BRANCHES, HOWEVER, MUST BE SHORTENED.
14. EACH TREE AND SHRUB SHALL BE PRUNED IN ACCORDANCE WITH STANDARD HORTICULTURAL PRACTICE TO PRESERVE NATURAL CHARACTER OF PLANT. PRUNING SHALL BE DONE WITH CLEAN, SHARP TOOLS.
15. ALL EXISTING TREES TO REMAIN SHALL BE PRUNED TO REMOVE ANY DAMAGED BRANCHES AS A RESULT OF CONSTRUCTION OPERATIONS. ALL EXISTING TREES SHALL BE FERTILIZED WITH A REGULAR GARDEN FERTILIZER (5-10-5) UPON COMPLETION OF WORK. THE ENTIRE LIMB OF ANY DAMAGED BRANCH SHALL BE CUT OFF AT THE TRUNK. CONTRACTOR TO ENSURE THAT CUTS ARE SMOOTH AND STRAIGHT. ANY EXPOSED ROOTS SHALL BE CUT BACK WITH SHARP TOOLS AND FILLED AROUND WITH TOPSOIL. COMPLETELY SATURATE THESE AREAS WITH WATER. ROOTS SHALL NOT BE LEFT EXPOSED FOR MORE THAN ONE (1) DAY. CONTRACTOR IS TO PROTECT ALL EXISTING TREES TO REMAIN BY ERECTING TREE PROTECTION FENCE AT THE DRIP LINE. THIS WILL ENSURE NO COMPACTION OF THE ROOT MASS.
16. ALL PLANTING BEDS SHALL BE MULCHED WITH 4" LAYER OF DOUBLE SHREDDED HARDWOOD BARK MULCH.
17. NEW PLANTING AREAS AND SOD SHALL BE ADEQUATELY IRRIGATED OR WATERED TO ESTABLISH THE PROPOSED PLANTS AND LAWN.
18. PRIOR TO THE ISSUANCE OF ANY CERTIFICATE OF OCCUPANCY, THE PROPOSED LANDSCAPE AS SHOWN ON THE APPROVED LANDSCAPE PLAN MUST BE INSTALLED, INSPECTED AND APPROVED BY THE MUNICIPAL LANDSCAPE ARCHITECT. THE MUNICIPAL ENGINEER AND LANDSCAPE ARCHITECT SHALL TAKE INTO ACCOUNT SEASONAL CONSIDERATIONS IN THIS REGARD AS FOLLOWS. THE PLANTING OF TREES, SHRUBS, VINES OR GROUND COVER AS REQUIRED BY OR ASSOCIATED WITH A SUBDIVISION OR SITE PLAN APPROVAL BY THE PLANNING BOARD OR ZONING BOARD OF ADJUSTMENT SHALL BE INSTALLED DURING THE FOLLOWING PLANTING SEASONS:

TYPE	DATES
PLANTS	3/15 TO 12/15
LAWN	3/15 TO 6/15
	9/15 TO 12/1

FURTHERMORE, THE FOLLOWING TREE VARIETIES SHALL NOT BE PLANTED DURING THE FALL PLANTING SEASON DUE TO THE HAZARDS ASSOCIATED WITH DIGGING THESE TREES IN THIS SEASON.

ACER RUBRUM	POPULUS VARIETIES
BETULA VARIETIES	PRUNUS VARIETIES
CARPINUS VARIETIES	PYRUS VARIETIES
CRATAEGUS VARIETIES	QUERCUS VARIETIES
KOELREUTERIA	SALIX WEEPING VARIETIES
LIQUIDAMBAR STYRACIFLUA	TILIA TOMENTOSA
LIRIODENDRON TULIPIFERA	ZELKOVA VARIETIES
PLATANUS ACERIFOLIA	

ANY PLANTINGS INSTALLED IN CONFLICT WITH THIS REQUIREMENT MUST RECEIVE THE WRITTEN APPROVAL BY THE MUNICIPAL ENGINEER OR LANDSCAPE ARCHITECT, PRIOR TO PLANTING. FAILURE TO COMPLY WITH THESE REQUIREMENTS WILL REQUIRE THE REMOVAL OF THE PLANTING IN QUESTION. THIS REQUIREMENT DOES NOT APPLY TO SEEDING OR SODDING OR PLANTINGS SPECIFICALLY FOR SOIL STABILIZATION PURPOSES. THE PLANTING ASSOCIATED WITH ANY LOT GIVEN A CERTIFICATE OF OCCUPANCY OUTSIDE THESE PERIODS SHALL BE PROVIDED DURING THE PREVIOUS OR NEXT APPROPRIATE SEASON.
19. ALL DISTURBED AREAS TO BE TREATED WITH TOPSOIL SEED SOD STABILIZATION METHOD.

DECIDUOUS AND EVERGREEN SHRUB PLANTING DETAIL

NOT TO SCALE

EVERGREEN TREE PLANTING DETAIL

NOT TO SCALE

DECIDUOUS TREE PLANTING DETAIL

NOT TO SCALE

PERENNIAL/GROUND COVER PLANTING DETAIL

NOT TO SCALE

THIS PLAN SET IS FOR PERMITTING PURPOSES ONLY AND MAY NOT BE USED FOR CONSTRUCTION

DYNAMIC ENGINEERING
LAND DEVELOPMENT CONSULTING • PERMITTING • GEOTECHNICAL • ENVIRONMENTAL • SURVEY • PLANNING & ZONING

TITLE: LANDSCAPE NOTES & DETAILS

PROJECT: VOORHEES ROUTE 73 DEVELOPMENT GROUP, LLC
PROPOSED WAWA FOOD MARKET & FUELING STATION
BLOCK 36, LOT 11 & BLOCK 220, LOTS 9 & 16
NJSH ROUTE 73 AND KRESSON ROAD (CR 671)
TOWNSHIP OF EVESHAM (BURLINGTON COUNTY) & TOWNSHIP OF VOORHEES (CAMDEN COUNTY) NEW JERSEY

MATTHEW SHARO — PROFESSIONAL ENGINEER
MARK A. WHITAKER — PROFESSIONAL ENGINEER

JOB No: 0744-12-010 | DATE: 12/10/19 | DRAWN BY: KTK | DESIGNED BY: MS | CHECKED BY: MAW | SCALE: (H) NOT TO (V) SCALE

SHEET No: 22 OF 35

THIS PLAN TO BE UTILIZED FOR SOIL EROSION & SEDIMENT CONTROL PURPOSES ONLY

SEE SHEET 26 OF 35 FOR SOIL EROSION NOTES & DETAILS

MIT OF DISTURBANCE = 120,582 SF. (2.77 Ac.)

EROSION CONTROL LEGEND

- PROP. LIMIT OF DISTURBANCE LINE
- PROP. SILT FENCE LINE
- PROP. TREE PROTECTION FENCE LINE
- PROP. INLET FILTER
- PROP. HAYBALE SEDIMENT BARRIER

LIMIT OF DISTURBANCE

PROP. SILT FENCE

PROP. STABILIZED CONSTRUCTION ENTRANCE

PROP. INLET PROTECTION

PROP. STOCKPILE LOCATION

PROP. TREE PROTECTION FENCE

TO BE VACATED UPON APPROVAL

MATCHLINE 'A'

MATCHLINE 'B'

GRAPHIC SCALE

(IN FEET)
1 INCH = 20 FT.

THIS PLAN SET IS FOR PERMITTING PURPOSES ONLY AND MAY NOT BE USED FOR CONSTRUCTION

DYNAMIC ENGINEERING
LAND DEVELOPMENT CONSULTING • PERMITTING • GEOTECHNICAL • ENVIRONMENTAL • SURVEY • PLANNING & ZONING
1904 Main Street, Lake Como, NJ 07719, T: 732.974.0198, F: 732.974.3521, www.dynamicec.com
Additional offices conveniently located at: Chester, New Jersey T: 908.879.9229 | Toms River, New Jersey T: 732.974.0198 | Newtown, Pennsylvania T: 267.685.0276 | Allen, Texas T: 972.534.2100 | Austin, Texas T:512.646.2644 | Houston, Texas T: 281.789.6400 | Delray Beach, Florida T: 561.921.8570

TITLE: SOIL EROSION & SEDIMENT CONTROL PLAN 'A'

PROJECT: VOORHEES ROUTE 73 DEVELOPMENT GROUP, LLC
PROPOSED WAWA FOOD MARKET & FUELING STATION
BLOCK 36, LOT 11 & BLOCK 220, LOTS 9 & 16
NJSH ROUTE 73 AND KRESSON ROAD (CR 671)
TOWNSHIP OF EVESHAM (BURLINGTON COUNTY) & TOWNSHIP OF VOORHEES (CAMDEN COUNTY) NEW JERSEY

JOB No: 0744-12-010
DATE: 12/10/19
DRAWN BY: KTK
SCALE: (H) 1"=20' (V)
DESIGNED BY: MS
CHECKED BY: MAW
SHEET No: 23 OF 35

By	Date	Comments
RND	08/03/20	REV. PER TOWNSHIP ENGINEER & SEWER

MATTHEW SHARO, PROFESSIONAL ENGINEER
MARK A. WHITAKER, PROFESSIONAL ENGINEER

CONSTRUCTION CHECK _____ DATE _____
CONSTRUCTION CHECK _____ DATE _____

THIS PLAN TO BE UTILIZED FOR SOIL EROSION & SEDIMENT CONTROL PURPOSES ONLY

SEE SHEET 26 OF 35 FOR SOIL EROSION NOTES & DETAILS

MATCHLINE 'A'

MATCHLINE 'B'

EROSION CONTROL LEGEND

- PROP. LIMIT OF DISTURBANCE LINE
- PROP. SILT FENCE LINE
- PROP. TREE PROTECTION FENCE LINE
- PROP. INLET FILTER
- PROP. HAYBALE SEDIMENT BARRIER

BLOCK 220, LOT 9
N/F VR-W/J&J VOORHEES II, LLC
(CURRENT OWNER AS PER REALQUEST SEARCH DB 9729, PG 1290)
GNZ, LLC (NOT CURRENT OWNER AS PER TITLE REPORT DB 6255 PG 109 & DB 7563, PG 634)

BLOCK 220, LOTS 9
BLOCK 36, LOT 11
AREA=181,320 ± SQ. FT. / 4.163± AC.

PROP. TREE PROTECTION FENCE

PROP. INLET PROTECTION

LIMIT OF DISTURBANCE

PROP. SILT FENCE

PROP. HAYBALE SEDIMENT BARRIER

BLOCK 220, LOT 11
N/F J&J DEVELOPMENT GROUP, LLC
(TRACT 1)
(TRACT 2)

BLOCK 220, LOT 14
N/F J&J DEVELOPMENT GROUP, LLC

BLOCK 220, LOT 15
N/F VOORHEES LAW CENTER LLC,
D.B. 7704 PG. 539

BLOCK 220, LOT 16
N/F WALTER & BOBBI JEAN HEIL
D.B. 7190 PG. 1780

BLOCK 220, LOT 12
N/F COMMERCE BANK, N.A.,
D.B. 4450 PG. 485

BLOCK 220
LOT 12

FORMERLY BLOCK 220, LOT 13

ACCESS EASEMENT LOT 13, BLOCK 220 VOORHEES TOWNSHIP DEED BOOK 4448 PAGE 889

RIGHT OF WAY DEDICATION DEED BOOK 4690 PAGE 409

BURLINGTON COUNTY
TOWNSHIP OF EVESHAM

CAMDEN COUNTY
TOWNSHIP OF VOORHEES

C1 ZONE

MB ZONE

RR ZONE

RESIDENTIAL USE

RELIGIOUS USE

OFFICE USE

HADDONFIELD – KRESSON ROAD
(AKA COUNTY ROUTE 671)
(AKA HADDONFIELD – MILFORD ROAD)
(AKA KRESSON ROAD)
(AKA HADDONFIELD ROAD)
(VARIABLE WIDTH – AS PER DEED)
(SPEED LIMIT - 45 MPH)

REPLACE DRIVEWAYS & CURBING IN KIND AS REQUIRED

GRAPHIC SCALE
-20 0 10 20 40 80
(IN FEET)
1 INCH = 20 FT.

THIS PLAN SET IS FOR PERMITTING PURPOSES ONLY AND MAY NOT BE USED FOR CONSTRUCTION

DYNAMIC ENGINEERING
LAND DEVELOPMENT CONSULTING • PERMITTING • GEOTECHNICAL • ENVIRONMENTAL • SURVEY • PLANNING & ZONING
1904 Main Street, Lake Como, NJ 07719 T: 732.974.0198 F: 732.974.3521 www.dynamicec.com
Additional offices conveniently located at:
Chester, New Jersey T: 908.879.9229 | Toms River, New Jersey T: 732.974.0198 | Newtown, Pennsylvania T: 267.685.0276
Allen, Texas T: 972.534.2100 | Austin, Texas T: 512.646.2668 | Houston, Texas T: 281.789.6400
Delray Beach, Florida T: 561.921.8570

TITLE: SOIL EROSION & SEDIMENT CONTROL PLAN 'B'

PROJECT: VOORHEES ROUTE 73 DEVELOPMENT GROUP, LLC
PROPOSED WAWA FOOD MARKET & FUELING STATION
BLOCK 36, LOT 11 & BLOCK 220, LOTS 9 & 16
NJSH ROUTE 73 AND KRESSON ROAD (CR 671)
TOWNSHIP OF EVESHAM (BURLINGTON COUNTY) & TOWNSHIP OF VOORHEES (CAMDEN COUNTY) NEW JERSEY

JOB No: 0744-12-010
DATE: 12/10/19
DRAWN BY: KTK
SCALE: (H) 1"=20' (V)
DESIGNED BY: MS
CHECKED BY: MAW
SHEET No: 24 OF 35

By	Date	Comments
RND	08/03/20	REV. PER TOWNSHIP ENGINEER & SEWER COMMENTS

MATTHEW SHARO, PROFESSIONAL ENGINEER
MARK A. WHITAKER, PROFESSIONAL ENGINEER
CONSTRUCTION CHECK DATE
CONSTRUCTION CHECK DATE

THIS PLAN TO BE UTILIZED FOR SOIL EROSION & SEDIMENT CONTROL PURPOSES ONLY

UNDEVELOPED

BLOCK 220, LOT 9.02
N/F REOVEN OANONO,
D.B. 5286 PG. 597

15' WIDE DRAINAGE EASEMENT
LOT 9.02, BLOCK 220, VOORHEES TOWNSHIP
DEED BOOK 5286, PAGE 597

S56°54'49"E 374.94'

N56°54'49"W 384.47'

BLOCK 220, LOT 17
N/F MARLTON KOREAN ASSEMBLY
OF GOD INC.,
D.B. 8895 PG. 637

RELIGIOUS USE

BIRCH STREET
(50 FEET WIDE - AS PER DEED)

N33°05'11"E 15.00'

CONC. MONUMENT FOUND

'B' INLET
TC: 91.25
GR: 90.58
INV.(IN): 86.63 (E31)
INV.(OUT): 86.48 (E32)

'B' INLET
TC: 91.17
GR: 90.50
INV.(OUT): 87.15 (E51)

SAN. MH
RIM: 90.86
INV.(IN): 85.31 (E30)
INV.(OUT): 85.31 (E31)

8" SAN. PVC (E51)

15" CMP (E51)

15" RCP (E50)

8" SAN. CIP (E50)

SAN. MH
RIM: 89.38
INV.(IN): 86.08 (E49)
INV.(OUT): 86.08 (E50)

SAN. MH
RIM: 91.00
INV.(IN): 86.35 (E48)
INV.(OUT): 86.35 (E49)

CONC. MONUMENT FOUND

PROP. 4'ø SAN. MH
SAN. STR. #46
RIM: 97.27
INV IN (8"): 87.37
INV OUT (8"): 87.27

MEET EXIST. GRADE

8" SAN. CIP (E40)

15" CMP (E2)

'B' INLET
TC: 90.75
GR: 89.95
INV.(IN): 86.73 (E1)
INV.(OUT): 86.89 (E2)

'B' INLET
TC: 90.78
GR: 90.28
INV.(OUT): 87.53 (E1)

8" SAN. PVC (E40)

STORM MH
RIM: 88.37
INV.(IN): 85.77 (E2)
INV.(IN): 85.67 (E52)
INV.(OUT): 85.62 (E42)

'B' INLET
TC: 89.59
GR: 88.39
INV.(IN): 84.29 (E42)
INV.(IN): 84.41 (E43)
INV.(OUT): 84.13 (E44)

'B' INLET
TC: 88.96
GR: 88.46
INV.(OUT): 85.06 (E43)

UP BT120 1/2 VT

UP PK05329

8" SAN. PVC (E47)

8" SAN. PVC (E45)

SAN. C/O

UP BT122VT

UP C10322

UP 68134/
4740B COND

2 STORY HOUSE

SAN. MH
RIM: 90.09
INV.(OUT): 87.09 (E47)

SAN. MH
RIM: 90.84
INV.(IN): 86.74 (E45)
INV.(IN): 86.74 (E47)
INV.(OUT): 86.69 (E48)

GRAPHIC SCALE

-20 0 10 20 40 80

(IN FEET)
1 INCH = 20 FT.

THIS PLAN SET IS FOR PERMITTING PURPOSES ONLY AND MAY NOT BE USED FOR CONSTRUCTION

Date	Comments	By
08/03/20	REV. PER TOWNSHIP ENGINEER & SEWER	RND

DYNAMIC ENGINEERING
LAND DEVELOPMENT CONSULTING • PERMITTING • GEOTECHNICAL • ENVIRONMENTAL • SURVEY • PLANNING & ZONING
1904 Main Street
Lake Como, NJ 07719
T: 732.974.0198
F: 732.974.3521
www.dynamiceo.com
Additional offices conveniently located at:
Chester, New Jersey T: 908.879.9229 | Toms River, New Jersey T: 732.974.0198 | Newtown, Pennsylvania T: 267.685.0276
Allen, Texas T: 972.534.2100 | Austin, Texas T: 512.646.2646 | Houston, Texas T: 281.789.6400
Delray Beach, Florida T: 561.921.8570

TITLE:
OFF-SITE SOIL EROSION & SEDIMENT CONTROL PLAN

PROJECT: **VOORHEES ROUTE 73 DEVELOPMENT GROUP, LLC**
PROPOSED WAWA FOOD MARKET & FUELING STATION
BLOCK 36, LOT 11 & BLOCK 220, LOTS 9 & 16
NJSH ROUTE 73 AND KRESSON ROAD (CR 671)
TOWNSHIP OF EVESHAM (BURLINGTON COUNTY) & TOWNSHIP OF VOORHEES (CAMDEN COUNTY) NEW JERSEY

JOB No:	0744-12-010
DATE:	12/10/19
DRAWN BY:	KTK
SCALE: (H)	1"=20'
DESIGNED BY:	MS
(V)	
CHECKED BY:	MAW
SHEET No:	25
CONSTRUCTION CHECK	DATE
CONSTRUCTION CHECK	DATE
OF	35

MATTHEW SHARO
PROFESSIONAL ENGINEER

MARK A. WHITAKER
PROFESSIONAL ENGINEER

YOURSELF
IGATORS, DESIGNERS, OR ANY PERSON
S SURFACE, ANYWHERE IN ANY STATE.
11
below

COUNTY SOIL EROSION & SEDIMENT CONTROL NOTES
TEMENTS NECESSARY FOR A COMPLETE APPLICATION

D SEDIMENT CONTROL PRACTICES SHALL BE IN PLACE PRIOR TO ANY GRADING OPERATION AND/OR INSTALLATION OF PROPOSED STRUCTURES OR

CONTROL PRACTICES ON THE PLAN SHALL BE CONSTRUCTED IN ACCORDANCE WITH THE STANDARDS FOR SOIL EROSION AND SEDIMENT CONTROL

D SEDIMENT CONTROL PRACTICES SHALL BE LEFT IN PLACE UNTIL CONSTRUCTION IS COMPLETED AND/OR THE AREA IS STABILIZED.
WILL BE LEFT EXPOSED FOR MORE THAN SIXTY (60) DAYS AND NOT SUBJECT TO CONSTRUCTION TRAFFIC SHALL IMMEDIATELY RECEIVE A
RTILIZATION IN ACCORDANCE WITH THE STANDARDS. IF THE SEASON PROHIBITS TEMPORARY SEEDING, THE DISTURBED AREAS WILL BE MULCHED
NT AND ANCHORED IN ACCORDANCE WITH THE STANDARDS.
TO EROSION WILL RECEIVE A TEMPORARY SEEDING IN COMBINATION WITH STRAW MULCH IN ACCORDANCE WITH THE STANDARDS IMMEDIATELY

S BE GRADED AND MAINTAINED SUCH THAT ALL STORMWATER RUNOFF IS DIVERTED TO SOIL EROSION AND SEDIMENT CONTROL FACILITIES.
MENT CONTROL STRUCTURES WILL BE INSPECTED AND MAINTAINED ON A REGULAR BASIS AND AFTER EVERY STORM EVENT.
O BE LOCATED WITHIN FIFTY (50) FEET OF A FLOODPLAIN, SLOPE, ROADWAY OR DRAINAGE FACILITY. THE BASE OF ALL STOCKPILES SHOULD BE
BARRIER OR SEDIMENT FENCE. PROPOSED LOCATIONS MUST BE DELINEATED ON THE PLANS.
ANING PAD WILL BE INSTALLED WHEREVER A CONSTRUCTION ACCESS EXISTS. THE RIP RAP PAD MUST BE 100 FEET IN LENGTH AND THE STONE
PLACED 12" THICK AND THE FULL WIDTH OF THE ENTRANCE. IT SHOULD BE UNDERLAIN WITH A SUITABLE SYNTHETIC FILTER FABRIC AND
MUST BE DELINEATED AND DETAILED ON THE PLANS.
ACCESS IS TO BE USED AS AN EXIT ONTO A MAJOR HIGHWAY, A THIRTY (30) FOOT PAVED TRANSITION AREA SHALL BE INSTALLED.
TABILIZED WITH 2 ½" CRUSHED STONE OR SUB BASE PRIOR TO INDIVIDUAL LOT CONSTRUCTION.
KEPT CLEAN AT ALL TIMES.
LL BE PROTECTED DURING CONSTRUCTION (FILTER DETAILS APPEAR ON THE PLAN).
TS WILL BE STABILIZED BEFORE THE DISCHARGE POINTS BECOME OPERATIONAL.
S MUST DISCHARGE DIRECTLY INTO A SEDIMENT FILTRATION DEVICE. THE SEDIMENT FILTER MUST BE PLACED SO AS NOT TO CAUSE EROSION OF
D PLACEMENT AND USE OF THE STRUCTURE MUST BE APPROVED BY THE DISTRICT EROSION CONTROL INSPECTOR PRIOR TO COMMENCEMENT OF

OIL CONSERVATION DISTRICT SHALL BE NOTIFIED 72 HOURS PRIOR TO ANY LAND DISTURBANCE.
OR LESS OR CONTAINING IRON SULFIDE MUST BE COVERED WITH A MINIMUM OF 12 INCHES OF SOIL HAVING A pH of 5.0 OR MORE BEFORE

BILITY OF THE DEVELOPER TO PROVIDE A CONFIRMATION OF LIME, FERTILIZATION AND SEED APPLICATION RATES AT THE REQUEST OF THE
ONSERVATION DISTRICT.
QUIRES THAT NO CERTIFICATE OF OCCUPANCY BE ISSUED BEFORE ALL THE PROVISIONS OF THE CERTIFIED SOIL EROSION AND SEDIMENT CONTROL
WITH FOR PERMANENT MEASURES. ALL SITE WORK FOR THE PROJECT MUST BE COMPLETED PRIOR TO THE DISTRICT ISSUING A REPORT OF
SITE TO THE ISSUANCE OF A CERTIFICATE OF OCCUPANCY BY THE MUNICIPALITY.
QUIRES THAT UPON PERMANENT SITE STABILIZATION AND COMPLETION OF CONSTRUCTION THE CONTRACTOR SHALL APPLY TO THE SOIL
A FINAL COMPLIANCE INSPECTION TO CHECK THAT ALL THE PROVISIONS OF THE CERTIFIED SOIL EROSION AND SEDIMENT CONTROL PLAN HAVE
ERMANENT MEASURES.
BANCE MAY REQUIRE ADDITIONAL CONTROL MEASURES TO BE DETERMINED BY THE DISTRICT EROSION CONTROL INSPECTOR.
SOIL EROSION AND SEDIMENT CONTROL PLAN MUST BE MAINTAINED ON THE PROJECT SITE DURING CONSTRUCTION.
PROJECT PRIOR TO ITS COMPLETION WILL TRANSFER FULL RESPONSIBILITY FOR COMPLIANCE WITH THE CERTIFIED PLAN TO ALL SUBSEQUENT

MPLETION OF STRIPPING AND STOCKPILING TOPSOIL, THE STOCKPILE SHALL BE SEEDED WITH TEMPORARY VEGETATION. STABILIZE TOPSOIL
LCH FOR PROTECTION IF THE SEASON DOES NOT PERMIT THE ESTABLISHMENT OF TEMPORARY SEED.
PLAN WILL REQUIRE THE SUBMISSION OF A REVISED SOIL EROSION AND SEDIMENT CONTROL PLAN TO THE BURLINGTON COUNTY SOILS
REVISED PLAN MUST BE IN ACCORDANCE WITH THE CURRENT STANDARDS FOR SOIL EROSION AND SEDIMENT CONTROL IN NEW JERSEY.
ALL EXPOSED SURFACES SHALL NOT BE CONSTRUCTED STEEPER THAN 3:1
TROL INSPECTOR MAY REQUIRE ADDITIONAL MEASURES TO BE INSTALLED.
ROSION CONTROLS FOR INDIVIDUAL LOTS WILL TRANSFER TO SUBSEQUENT OWNERS OF THE LOT. THIS RESPONSIBILITY WILL BE DESCRIBED IN THE
HOME PLAN CONTAINING ALL NECESSARY EROSION CONTROLS WILL BE PROVIDED TO THE OWNER.
AREAS WILL BE MAINTAINED ON A CONTINUAL BASIS AND AS NEEDED.
N PREVENTION PLAN AND THE SPILL RESPONSE PLAN SHALL BE AVAILABLE ON SITE FOR REVIEW BY THE SCD INSPECTOR AND/OR THE NJDEP

DEP INSPECTOR MAY REQUIRE ADDITIONAL MEASURES FOR STORMWATER POLLUTION PREVENTION TO BE INSTALLED.
WATER POLLUTION PLAN MEASURES WILL BE CONDUCTED AND DOCUMENTED ON A REGULAR BASIS AND AFTER EVERY STORM EVENT.
ERS WILL NOT BE PERMITTED TO OVERFLOW.
OR SANITARY WASTES WILL BE CLEANED UP IMMEDIATELY, AND IN ACCORDANCE WITH THE SPILL RESPONSE PLAN. SPILL KITS MUST BE
ENT TO THE SITE.
E RELEASES IN EXCESS OF REPORTABLE QUANTITIES (RQ) ESTABLISHED UNDER 40 C.F.R. 110, 117 AND 302 THAT OCCUR WITHIN A 24 HOUR
TO THE NATIONAL RESPONSE CENTER (800-424-8802).

ION SPECIFICATIONS - TEMPORARY
ID MULCHING:

E UNLESS SOIL TESTING INDICATES OTHERWISE.
RE OR 11 LBS/ 1000 SF OF 10-20-10 OR EQUIVALANT WITH 50% WATER INSOLUABLE NITROGEN UNLESS A SOIL TEST INDICATES OTHERWISE.

DLBS/ACRE OR OTHER APPROVED SEEDS; PLANT BETWEEN MARCH 1 AND MAY 15 OR BETWEEN AUGUST 15 AND OCTOBER 1.

/AC. OR OTHER APPROVED SEEDS; PLANT BETWEEN MAY 15 AND AUGUST 15.
GRAIN STRAW, HAY FREE OF SEEDS, OR SALT HAY AT A RATE OF 1.5-2 TONS PER ACRE 70 TO 90 LBS/1,000 SF TO BE APPLIED ACCORDING
MULCH SHALL BE SECURED BY APPROVED METHODS (I.E. PEG AND TWINE, MULCH NETTING, LIQUID MULCH BINDER, OR CRIMPER

NT SEEDING:

120 LBS/ACRE 2.7 LBS/1000 SQ.FT.
- 30 LBS/ACRE 0.7 LBS/1000 SQ.FT.
40 LBS/ACRE 0.9 LBS/1000 SQ.FT.
SPECIFICATIONS:
RIALS TO BE UNROTTED SMALL GRAIN STRAW, HAY FREE OF SEEDS, OR SALT HAY AT THE RATE OF 1.5 TO 2 TONS PER ACRE OR 70 TO 90
. FT. EXCEPT THAT WHERE A CRIMPER IS USED INSTEAD OF A LIQUID MULCH-BINDER THE RATE OF APPLICATION IS 3 TONS PER ACRE.
HAND OR MECHANICALLY SO THAT APPROXIMATELY 85% OF SOIL SURFACE WILL BE COVERED.
BE DONE IMMEDIATELY AFTER PLACEMENT BY ONE OF THE FOLLOWING METHODS:

NDERS
ORING COULTER TOOL)

) FOR STABILIZATION WITH MULCH ONLY

N STRAW AT 70 TO 90 POUNDS PER 1,000 SQUARE FEET AND ANCHORED WITH A MULCH ANCHORING TOOL, LIQUID MULCH BINDERS, OR NETTING
LE MATERIALS MAY BE USED IF APPROVED BY THE SOIL CONSERVATION DISTRICT.
COMMENDED AT THE RATE OF 600 TO 1,200 GALLONS PER ACRE. THIS IS SUITABLE FOR A LIMITED PERIOD OF TIME WHERE TRAVEL BY PEOPLE,
S NOT A PROBLEM.
OIL STABILIZERS MAYBE USED UNDER SUITABLE CONDITIONS AND IN QUANTITIES AS RECOMMENDED BY THE MANUFACTURER.
FIBER MULCH AT THE RATE OF 1,500 POUNDS PER ACRE (OR ACCORDING TO THE MANUFACTURER'S REQUIREMENTS) MAY BE APPLIED BY A

S PAPER JUTE, EXCELSIOR, COTTON, OR PLASTIC, MAYBE USED.
ORMLY TO A MINIMUM DEPTH OF 2 INCHES MAY BE USED EXCEPT IN AREAS OF FLOWING WATER.
OR SLAG AT RATE OF 9 CUBIC YARDS PER 1000 SQ. FT. AT DEPTH OF 3 INCHES.
DONE IMMEDIATELY AFTER PLACEMENT BY ONE OF THE FOLLOWING METHODS:

NDERS
ANCHORING COULTER TOOL)

YOURSELF
CAVATORS, DESIGNERS, OR ANY PERSON
S SURFACE ANYWHERE IN ANY STATE

811 below

CAMDEN COUNTY SOIL EROSION & SEDIMENT CONTROL NOTES

1. ALL APPLICABLE EROSION AND SEDIMENT CONTROL PRACTICES SHALL BE IN PLACE PRIOR TO ANY GRADING OPERATION AND/OR INSTALLATION OF PROPOSED STRUCTURES OR UTILITIES.
2. SOIL EROSION AND SEDIMENT CONTROL PRACTICES ON THIS PLAN SHALL BE CONSTRUCTED IN ACCORDANCE WITH THE STANDARDS FOR SOIL EROSION AND SEDIMENT CONTROL IN NEW JERSEY.
3. APPLICABLE EROSION AND SEDIMENT CONTROL PRACTICES SHALL BE LEFT IN PLACE UNTIL CONSTRUCTION IS COMPLETED AND/OR THE AREA IS STABILIZED.
4. THE CONTRACTOR SHALL PERFORM ALL WORK, FURNISH ALL MATERIALS AND INSTALL ALL MEASURES REQUIRED TO REASONABLY CONTROL SOIL EROSION RESULTING FROM CONSTRUCTION OPERATIONS AND PREVENT EXCESSIVE FLOW OF SEDIMENT FROM THE CONSTRUCTION SITE.
5. ANY DISTURBED AREA THAT IS TO BE LEFT EXPOSED FOR MORE THAN THIRTY (30) DAYS AND NOT SUBJECT TO CONSTRUCTION TRAFFIC SHALL IMMEDIATELY RECEIVE A TEMPORARY SEEDING AND FERTILIZATION IN ACCORDANCE WITH THE NEW JERSEY STANDARDS AND THEIR RATES SHOULD BE INCLUDED IN THE NARRATIVE. IF THE SEASON PROHIBITS TEMPORARY SEEDING, THE DISTURBED AREAS WILL BE MULCHED WITH SALT HAY OR EQUIVALENT AND ANCHORED IN ACCORDANCE WITH THE NEW JERSEY STANDARDS (I.E. PEG AND TWINE, MULCH NETTING OR LIQUID MULCH BINDER).
6. IT SHALL BE THE RESPONSIBILITY OF THE DEVELOPER TO PROVIDE CONFIRMATION OF LIME, FERTILIZER AND SEED APPLICATION AND RATES OF APPLICATION AT THE REQUEST OF THE CAMDEN COUNTY SOIL CONSERVATION DISTRICT.
7. ALL CRITICAL AREAS SUBJECT TO EROSION WILL RECEIVE A TEMPORARY SEEDING IN COMBINATION WITH STRAW MULCH AT A RATE OF 2 TONS PER ACRE, ACCORDING TO THE NEW JERSEY STANDARDS IMMEDIATELY FOLLOWING ROUGH GRADING.
8. THE SITE SHALL AT ALL TIMES BE GRADED AND MAINTAINED SUCH THAT ALL STORMWATER RUNOFF IS DIVERTED TO SOIL EROSION AND SEDIMENT CONTROL FACILITIES.
9. ALL SEDIMENTATION STRUCTURES WILL BE INSPECTED AND MAINTAINED ON A REGULAR BASIS AND AFTER EVERY STORM EVENT.
10. A CRUSHED STONE, TIRE CLEANING PAD WILL BE INSTALLED WHEREVER A CONSTRUCTION ACCESS EXISTS. THE STABILIZED PAD WILL BE INSTALLED ACCORDING TO THE STANDARD FOR STABILIZED CONSTRUCTION ACCESS
11. ALL DRIVEWAYS MUST BE STABILIZED WITH 2 ½" CRUSHED STONE OR SUBBASE PRIOR TO INDIVIDUAL LOT CONSTRUCTION.
12. PAVED ROADWAYS MUST BE KEPT CLEAN AT ALL TIMES.
13. ALL CATCH BASIN INLETS WILL BE PROTECTED ACCORDING TO THE CERTIFIED PLAN.
14. ALL STORM DRAINAGE OUTLETS WILL BE STABILIZED, AS REQUIRED, BEFORE THE DISCHARGE POINTS BECOME OPERATIONAL.
15. ALL DEWATERING OPERATIONS MUST DISCHARGE DIRECTLY INTO A SEDIMENT FILTER AREA. THE SEDIMENT FILTER SHOULD BE COMPOSED OF A SUITABLE SEDIMENT FILTER FABRIC. (SEE DETAIL) THE BASIN MUST BE DEWATERED TO NORMAL POOL WITHIN 10 DAYS OF THE DESIGN STORM.
16. NJSA 4:24-39, ET SEQ. REQUIRES THAT NO CERTIFICATE OF OCCUPANCY BE ISSUED BEFORE ALL PROVISIONS OF THE CERTIFIED SOIL EROSION AND SEDIMENT CONTROL PLAN HAVE BEEN COMPLIED WITH FOR PERMANENT MEASURES. ALL SITE WORK FOR THE PROJECT MUST BE COMPLETED PRIOR TO THE DISTRICT ISSUING A REPORT OF COMPLIANCE AS A PREREQUISITE TO THE ISSUANCE OF A CERTIFICATE OF OCCUPANCY BY THE MUNICIPALITY.
17. MULCHING IS REQUIRED ON ALL SEEDED AREAS TO INSURE AGAINST EROSION BEFORE GRASS IS ESTABLISHED TO PROMOTE EARLIER VEGETATION COVER.
18. OFFSITE SEDIMENT DISTURBANCE MAY REQUIRE ADDITIONAL CONTROL MEASURES TO BE DETERMINED BY THE EROSION CONTROL INSPECTOR.
19. A COPY OF THE CERTIFIED SOIL EROSION AND SEDIMENT CONTROL PLAN MUST BE MAINTAINED ON THE PROJECT SITE DURING CONSTRUCTION.
20. THE CAMDEN COUNTY SOIL CONSERVATION DISTRICT SHALL BE NOTIFIED 72 HOURS PRIOR TO ANY LAND DISTURBANCE.
21. ANY CONVEYANCE OF THIS PROJECT PRIOR TO ITS COMPLETION WILL TRANSFER FULL RESPONSIBILITY FOR COMPLIANCE WITH THE CERTIFIED PLAN TO ANY SUBSEQUENT OWNERS.
22. IMMEDIATELY AFTER THE COMPLETION OF STRIPPING AND STOCKPILING OF TOPSOIL, THE STOCKPILE MUST BE STABILIZED ACCORDING TO THE STANDARD FOR TEMPORARY VEGETATIVE COVER. STABILIZE TOPSOIL PILE WITH STRAW MULCH FOR PROTECTION IF THE SEASON DOES NOT PERMIT THE APPLICATION AND ESTABLISHMENT OF TEMPORARY SEEDING. ALL SOIL STOCKPILES ARE NOT TO BE LOCATED WITHIN FIFTY (50) FEET OF A FLOODPLAIN, SLOPE, ROADWAY OR DRAINAGE FACILITY AND THE BASE MUST BE PROTECTED WITH A SEDIMENT BARRIER.
23. ANY CHANGES TO THE SITE PLAN WILL REQUIRE THE SUBMISSION OF A REVISED SOIL EROSION AND SEDIMENT CONTROL PLAN TO THE CAMDEN COUNTY SOIL CONSERVATION DISTRICT. THE REVISED PLAN MUST BE IN ACCORDANCE WITH THE CURRENT NEW JERSEY STANDARDS FOR SOIL EROSION AND SEDIMENT CONTROL.
24. METHODS FOR THE MANAGEMENT OF HIGH ACID PRODUCING SOILS SHALL BE IN ACCORDANCE WITH THE STANDARDS. HIGH ACID PRODUCING SOILS ARE THOSE FOUND TO CONTAIN IRON SULFIDES OR HAVE A pH OF 4 OR LESS.
25. TEMPORARY AND PERMANENT SEEDING MEASURES MUST BE APPLIED ACCORDING TO THE NEW JERSEY STANDARDS, AND MULCHED WITH SALT HAY OR EQUIVALENT AND ANCHORED IN ACCORDANCE WITH THE NEW JERSEY STANDARDS (I.E. PEG AND TWINE, MULCH NETTING OR LIQUID MULCH BINDER).
26. MAXIMUM SIDE SLOPES OF ALL EXPOSED SURFACES SHALL NOT BE CONSTRUCTED STEEPER THAN 3:1 UNLESS OTHERWISE APPROVED BY THE DISTRICT.
27. DUST IS TO BE CONTROLLED BY AN APPROVED METHOD ACCORDING TO THE NEW JERSEY STANDARDS AND MAY INCLUDE WATERING WITH A SOLUTION OF CALCIUM CHLORIDE AND WATER.
28. ADJOINING PROPERTIES SHALL BE PROTECTED FROM EXCAVATION AND FILLING OPERATIONS ON THE PROPOSED SITE.
29. USE STAGED CONSTRUCTION METHODS TO MINIMIZE EXPOSED SURFACES, WHERE APPLICABLE.
30. ALL VEGETATIVE MATERIAL SHALL BE SELECTED IN ACCORDANCE WITH AMERICAN STANDARDS FOR NURSERY STOCK OF THE AMERICAN ASSOCIATION OF THE NURSERYMEN AND IN ACCORDANCE WITH THE NEW JERSEY STANDARDS.
31. NATURAL VEGETATION AND SPECIES SHALL BE RETAINED WHERE SPECIFIED ON THE LANDSCAPE PLAN.
32. THE SOIL EROSION INSPECTOR MAY REQUIRE ADDITIONAL SOIL EROSION MEASURES TO BE INSTALLED, AS DIRECTED BY THE DISTRICT INSPECTOR.

SEQUENCE OF CONSTRUCTION

PHASE 1: INSTALL STONE ANTI-TRACKING PAD AND OTHER SOIL EROSION AND SEDIMENT CONTROL MEASURES INCLUDING SLOPE PERIMETER HAY BALES AND SILT FENCING.
PHASE 2: CLEAR AND ROUGH GRADE FOR NEW BUILDING SITE AND OTHER STRUCTURES REQUIRING EXCAVATION.
PHASE 3: EXCAVATE AND INSTALL UNDERGROUND PIPING AND DRAINAGE STRUCTURES. EXCESS SOIL TO BE STORED ON SITE FOR REINSTALLATION AFTER CONSTRUCTION IS COMPLETED AND ALL SEDIMENT FROM BASIN IS REMOVED.
PHASE 4: EXCAVATE FOR BUILDING FOUNDATION.
PHASE 5: COMPLETE BUILDING CONSTRUCTION
PHASE 6: EXCAVATE AND INSTALL ONSITE IMPROVEMENTS INCLUDING CURBING.
PHASE 7: FINAL GRADING ON SITE.
PHASE 8: INSTALL PAVING, CONCRETE, AND FINAL VEGETATION INCLUDING SEEDING AND LANDSCAPING. REMOVE TEMPORARY SOIL EROSION AND SEDIMENT CONTROL MEASURES.

TEMPORARY SEEDING SPECIFICATIONS

1. APPLY 10-20-10 FERTILIZER AT A RATE OF 500 LBS PER ACRE OR 11 LBS. PER 1000 SQ. FEET.
2. APPLY LIMESTONE AT A RATE OF 40 LBS. PER ACRE OR 1 LB. PER 1000 SQ. FEET FOR SANDY LOAM.
3. APPLY MULCH AT A RATE OF 1.5 TO 2 TONS PER ACRE OR 70 TO 90 LBS. PER ACRE.
4. USE CRIMPER TO ANCHOR MULCH AND PREVENT MULCH FROM BLOWING.

PERMANENT SEEDING SPECIFICATIONS

1. APPLY FERTILIZER AND LIME IN THE SAME RATE AS DENOTED IN THE TEMPORARY SEEDING SPECIFICATIONS ABOVE.
2. APPLY THE FOLLOWING SEED MIXTURE AT THE SPECIFIED RATES:
   SPREADING FESCUE - 15 LBS. PER ACRE
   RED FESCUE - 15 LBS. PER ACRE
   KENTUCKY BLUEGRASS - 25 LBS. PER ACRE
   PERENNIAL RYEGRASS - 10 LBS. PER ACRE
3. APPLY MULCH AND MULCH ANCHORING AS SPECIFIED IN THE TEMPORARY SEEDING SPECIFICATIONS ABOVE.

TEMPORARY AND PERMANENT SEEDBED PREPARATIONS

1. WORK LIME AND FERTILIZER INTO SOIL WITH A DISC, SPINGTOOTH HARROW, ETC.
2. APPLY SEED UNIFORMLY BY HAND, CYCLONE SPREADER, DROP SEEDER, DRILL, CULTIPACKER, ETC. INCORPORATE SEED INTO THE SOIL BY RAKING OR DRAGGING.
3. MULCHING ON NEWLY SEEDED AREAS IS REQUIRED. MULCH MATERIAL SHOULD BE UNROTTED SMALL GRAIN HAY. SPREAD UNIFORMLY BY HAND OR MACHINE. MULCH ANCHORING TO BE PLACED IMMEDIATELY AFTER MULCHING.

ACID SOIL MANAGEMENT NOTES
METHODS AND MATERIALS

1. LIMIT THE EXCAVATION AREA AND EXPOSURE TIME WHEN HIGH ACID PRODUCING SOILS ARE ENCOUNTERED.

2. TOPSOIL STRIPPED FROM THE SITE SHALL BE STORED SEPARATELY FROM TEMPORARILY STOCKPILED HIGH ACID PRODUCING SOILS

3. STOCKPILES OF HIGH ACID PRODUCING SOIL SHOULD BE LOCATED ON LEVEL LAND TO MINIMIZE ITS MOVEMENT, ESPECIALLY WHEN THIS MATERIAL HAS A HIGH CLAY CONTENT.

4. TEMPORARILY STOCKPILED HIGH ACID PRODUCING SOIL MATERIAL TO BE EXPOSED MORE THAN 30 DAY S SHOULD BE COVERED WITH PROPERLY ANCHORED, HEAVY GRADE SHEETS OF POLYETHYLENE WHERE POSSIBLE. IF NOT POSSIBLE, STOCKPILES SHALL BE COVERED WITH A MINIMUM OF 3 TO 6 INCHES OF WOOD CHIPS TO MINIMIZE EROSION OF THE STOCKPILE. SILT FENCE SHALL BE INSTALLED AT THE TOE OF SLOPE TO CONTAIN MOVEMENT OF THE STOCKPILED MATERIAL. TOPSOIL SHALL NOT BE APPLIED TO THE STOCKPILES TO PREVENT TOPSOIL CONTAMINATION WITH HIGH ACID PRODUCING SOIL.

5. HIGH ACID PRODUCING SOILS WITH A PH OF 4 OR LESS, OR CONTAINING IRON SULFIDE, (INCLUDING BORROW FROM CUTS) SHALL BE ULTIMATELY PLACED OR BURIED WITH LIMESTONE APPLIED AT THE RATE OF 6 TONS PER ACRE (OR 274 POUNDS PER 1,000 SQUARE FEET OF SURFACE AREA) AND COVERED WITH A MINIMUM OF 12 INCHES OF SETTLED SOIL WITH A pH OF 5 OR MORE EXCEPT AS FOLLOWS:

A. AREAS WHERE TREES OR SHRUBS ARE TO BE PLANTED SHALL BE COVERED WITH A MINIMUM OF 24 INCHES OF SOIL WITH A PH OF 5 ORE MORE.

B. DISPOSAL AREAS SHALL NOT BE LOCATED WITHIN 24 INCHES OF ANY SURFACE OF A SLOPE OR BANK, SUCH AS BER MS, STREAM BANKS, DITCHES AND OTHERS TO PREVENT POTENTIAL LATERAL LEACHING DAMAGES.

6. EQUIPMENT USED FOR MOVEMENT OF HIGH ACID PRODUCING SOILS SHOULD BE CLEANED AT THE END OF THE DAY TO PREVENT SPREADING OF HIGH ACID SOIL MATERIALS TO OTHER PARTS OF THE SITE, INTO STREAMS OR STORMWATER CONVEYANCES AND TO PROTECT MACHINERY FROM ACCELERATED RUSTING.

7. NON VEGETATIVE EROSION CONTROL PRACTICES (STONE TRACKING PADS, STRATEGICALLY PLACED LIMESTONE CHECK DAM, SILT FENCE, WOOD CHIPS) SHOULD BE INSTALLED TO LIMIT THE MOVEMENT OF HIGH ACID PRODUCING SOILS FROM, AROUND OR OFF THE SITE.

8. FOLLOWING BURIAL OR REMOVAL OF HIGH ACID PRODUCING SOIL, TOPSOILING AND SEED OF THE SITE, (SEE TEMPORARY VEGETATIVE COVER FOR SOIL STABILIZATION, PG. 7-1, PERMANENT VEGETATIVE CO VER FOR SOIL STABILIZATION, PG. 4-1 AND TOPSOILING, PG. 8-1) MONITORING SHOULD CONTINUE FOR APPROXIMATELY 6 TO 12 MONTHS TO ASSURE THERE IS ADEQUATE STABILIZATION AND THAT NO HIGH ACID SOIL PROBLEMS EMERGE. IF PROBLEMS STILL EXIST THE AFFECTED AREA MUST B E TREATED AS INDICATED ABOVE TO CORRECT THE PROBLEM.

9. MONITORING OF AREAS WHERE HIGH ACID PRODUCING SOIL HAS BEEN PLACED OR BURIED SHOULD BE PERFORMED FOR AT LEAST 2 YEARS OR LONGER, IF PROBLEMS

MUNICIPAL, COUNTY, STATE AND MUA DETAILS TO SUPERCEDE DYNAMIC ENGINEERING DETAILS WHERE APPLICABLE

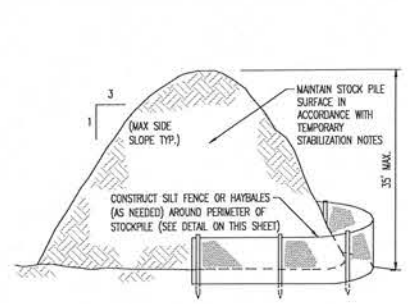

TEMPORARY STOCKPILE DETAIL
NOT TO SCALE

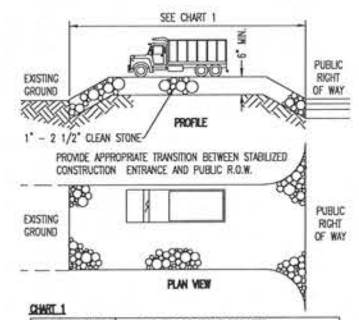

CHART 1

PERCENT SLOPE OF ROADWAY	LENGTH OF STONE REQUIRED	
	COARSE GRAINED SOILS	FINE GRAINED SOILS
0 TO 2%	50 FT	100 FT
2% TO 5%	100 FT	200 FT
>5%	ENTIRE ENTRANCE STABILIZED WITH FABC BASE COURSE (1)	

(1) AS PRESCRIBED BY LOCAL ORDINANCE OR OTHER GOVERNING AUTHORITY.

STABILIZED CONSTRUCTION ENTRANCE
NOT TO SCALE

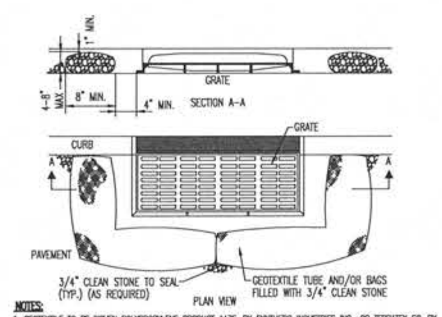

NOTES:
1. GEOTEXTILE TO BE WOVEN POLYPROPYLENE PRODUCT 117F, BY SYNTHETIC INDUSTRIES INC., OR TERRATEX SC, BY WEBTEC INC., OR APPROVED EQUAL.
2. 3/4" CLEAN STONE CORE SHALL BE COMPLETELY CONTAINED WITHIN GEOTEXTILE. SEAMS SHALL BE SEWN OR CLOSED BY SUITABLE MECHANICAL MEANS TO PREVENT LEAKAGE OF STONE.
3. WHERE NO CURB IS PRESENT, BARRIER SHALL COMPLETELY ENCIRCLE THE DRAIN INLET.
4. INLET GRATE OPENING IS TO BE KEPT CLEAR OF OBSTRUCTIONS AT ALL TIMES.
5. THE PROTECTION DEVICE WILL BE DESIGNED TO CAPTURE OR FILTER RUNOFF FROM THE 1 YEAR, 24 HOUR STORM EVENT AND SHALL SAFELY CONVEY HIGHER FLOWS DIRECTLY INTO THE STORM SEWER SYSTEM.
6. OTHER METHODS THAT ACCOMPLISH THE PURPOSE OF STORM SEWER INLET PROTECTION MAY BE USED IF APPROVED BY THE SOIL CONSERVATION DISTRICT.
7. INSPECTIONS SHALL BE FREQUENT. MAINTENANCE, REPAIR, AND REPLACEMENT SHALL BE MADE PROMPTLY, AS NEEDED. THE BARRIER SHALL BE REMOVED WHEN THE AREA DRAINING TOWARDS THE INLET HAS BEEN STABILIZED.

INLET FILTER DETAIL
NOT TO SCALE

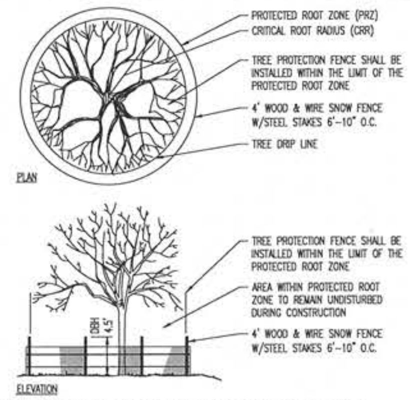

ESTIMATE A TREE'S PROTECTED ROOT ZONE (PRZ) BY CALCULATING THE CRITICAL ROOT RADIUS (CRR)
1. MEASURE THE DBH (DIAMETER OF TREE AT BREAST HEIGHT, 4.5' ABOVE GROUND ON THE UPHILL SIDE OF TREE) IN INCHES.
2. MULTIPLY MEASURED DBH BY 1.5 OR 1.0. EXPRESS THE RESULT IN FEET

DBH x 1.5: CRITICAL ROOT RADIUS FOR OLDER, UNHEALTHY, OR SENSITIVE SPECIES.
DBH x 1.0: CRITICAL ROOT RADIUS FOR YOUNGER, HEALTHY OR TOLERANT SPECIES.

TREE PROTECTION DURING SITE CONSTRUCTION DETAIL
NOT TO SCALE

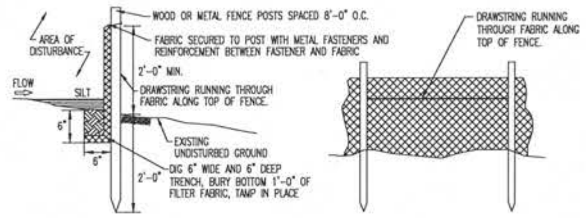

1. PLACE SILT FENCE AT LOCATIONS AS SHOWN ON THE SOIL EROSION AND SEDIMENT CONTROL PLAN.
2. THE SLOPE OF THE LAND FOR AT LEAST 30 FEET ADJACENT TO ANY SILT FENCE SHALL NOT EXCEED 5 PERCENT
3. SILT FENCE SHALL BE INSTALLED SO WATER CANNOT BYPASS THE FENCE AROUND THE SIDES.
4. INSPECTION SHALL BE FREQUENT AND REPAIR OR REPLACEMENT SHALL BE MADE AS PROMPTLY AS POSSIBLE.
5. SILT FENCE SHALL REMAIN IN PLACE FOR THE DURATION OF THE PROJECT UNLESS OTHERWISE INSTRUCTED BY THE TOWNSHIP ENGINEER OR SOIL CONSERVATION DISTRICT.
6. THE BARRIER SHALL BE REMOVED WHEN THE CONTRIBUTING DRAINAGE AREA HAS BEEN STABILIZED SO AS NOT TO BLOCK OR IMPEDE STORM FLOW OR DRAINAGE.
7. FENCE POSTS SHALL BE SPACED 8 FEET CENTER-TO-CENTER OR CLOSER. THEY SHALL EXTEND AT LEAST 2 FEET INTO THE GROUND AND EXTEND AT LEAST 2 FEET ABOVE GROUND. POSTS SHALL BE CONSTRUCTED OF HARDWOOD A MIN. DIAMETER THICKNESS OF 1 1/2 INCHES.
8. A METAL FENCE WITH 6 INCH OR SMALLER OPENINGS AND AT LEAST 2 FEET HIGH MAY BE UTILIZED, FASTENED TO THE FENCE POSTS, TO PROVIDE REINFORCEMENT AND SUPPORT TO THE GEOTEXTILE FABRIC WHERE SPACE FOR OTHER PRACTICES IS LIMITED AND HEAVY SEDIMENT LOADING IS EXPECTED.
9. A GEOTEXTILE FABRIC, RECOMMENDED FOR SUCH USE BY THE MANUFACTURER, SHALL BE BURIED AT LEAST 6 INCHES DEEP IN THE GROUND. THE FABRIC SHALL EXTEND AT LEAST 2 FEET ABOVE GROUND. FABRIC MUST BE SECURELY FASTENED TO THE POSTS USING A SYSTEM CONSISTING OF METAL FASTENERS (NAILS OR STAPLES) AND HIGH STRENGTH REINFORCEMENT MATERIAL (NYLON WEBBING, GROMMETS, WASHERS ETC.) PLACED BETWEEN THE FASTENER AND THE GEOTEXTILE FABRIC. THE FASTENING SYSTEM SHALL RESIST TEARING AWAY FROM THE POST. THE FABRIC SHALL INCORPORATE A DRAWSTRING IN THE TOP PORTION OF THE FENCE FOR ADDED STRENGTH.

SILT FENCE DETAIL
NOT TO SCALE

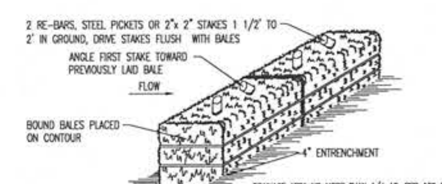

NOTES:
1. BALES SHALL BE PLACED AT THE TOP OF A SLOPE OR ON THE CONTOUR AND IN A ROW WITH ENDS TIGHTLY ABUTTING THE ADJACENT BALES.
2. EACH BALE SHALL BE PLACED SO THE BINDINGS ARE HORIZONTAL.
3. BALES SHALL BE SECURELY ANCHORED IN PLACE BY EITHER TWO STAKES OR RE-BARS DRIVEN THROUGH THE BALE. THE FIRST STAKE IN EACH BALE SHALL BE DRIVEN TOWARD THE PREVIOUSLY LAID BALE AT AN ANGLE TO FORCE THE BALES TOGETHER. STAKES SHALL BE DRIVEN FLUSH WITH THE BALE.
4. INSPECTION SHALL BE FREQUENT AND REPAIR REPLACEMENT SHALL BE PROMPTLY AS NEEDED.
5. BALES SHALL BE REMOVED WHEN THEY HAVE SERVED THEIR USEFULNESS SO AS NOT TO BLOCK OR IMPEDE STORM FLOW OR DRAINAGE.

HAYBALE SEDIMENT BARRIER DETAIL
NOT TO SCALE

THIS PLAN SET IS FOR PERMITTING PURPOSES ONLY AND MAY NOT BE USED FOR CONSTRUCTION

Date	Comments	By
08/03/20	REV. PER TOWNSHIP ENGINEER & SEWER COMMENTS	RND

DYNAMIC ENGINEERING
LAND DEVELOPMENT CONSULTING • PERMITTING • GEOTECHNICAL • ENVIRONMENTAL • SURVEY • PLANNING & ZONING
1904 Main Street Lake Como, NJ 07719 T: 732.974.0198 F: 732.974.3521 www.dynamicec.com
Additional offices conveniently located at:
Chester, New Jersey T: 908.879.9229 | Toms River, New Jersey T: 732.974.0198 | Newtown, Pennsylvania T: 267.685.0276
Allen, Texas T: 972.534.2100 | Austin, Texas T: 512.646.2646 | Houston, Texas T: 281.789.6400
Delray Beach, Florida T: 561.921.8570

TITLE:
SOIL EROSION & SEDIMENT CONTROL NOTES & DETAILS

PROJECT: VOORHEES ROUTE 73 DEVELOPMENT GROUP, LLC
PROPOSED WAWA FOOD MARKET & FUELING STATION
BLOCK 36, LOT 11 & BLOCK 220, LOTS 9 & 16
NJSH ROUTE 73 AND KRESSON ROAD (CR 671)
TOWNSHIP OF EVESHAM (BURLINGTON COUNTY) & TOWNSHIP OF VOORHEES (CAMDEN COUNTY) NEW JERSEY

JOB No: 0744-12-010
DATE: 12/10/19
DRAWN BY: KTK
SCALE: (H) NOT TO (V) SCALE
DESIGNED BY: MS
CHECKED BY: MAW
SHEET No: 26 OF 35

MATTHEW SHARO — PROFESSIONAL ENGINEER
MARK A. WHITAKER — PROFESSIONAL ENGINEER

CONSTRUCTION CHECK - DATE -
CONSTRUCTION CHECK - DATE -

SOIL COMPACTION MITIGATION NOTES

1. PROCEDURES SHALL BE USED TO MITIGATE EXCESSIVE SOIL COMPACTION PRIOR TO PLACEMENT OF TOPSOIL AND ESTABLISHMENT OF PERMANENT VEGETATIVE COVER.
2. RESTORATION OF COMPACTED SOILS SHALL BE THROUGH DEEP SCARIFICATION/TILLAGE (6' MINIMUM DEPTH) WHERE THERE IS NO DANGER TO UNDERGROUND UTILITIES (CABLES, IRRIGATION SYSTEMS, ETC). IN THE ALTERNATIVE, ANOTHER METHOD AS SPECIFIED BY A NEW JERSEY LICENSED PROFESSIONAL ENGINEER MAY BE SUBSTITUTED SUBJECT TO DISTRICT APPROVAL.
3. SOIL COMPACTION TESTING IS NOT REQUIRED IF/WHEN SUBSOIL COMPACTION REMEDIATION (SCARIFICATION/TILLAGE 6' MINIMUM DEPTH) IS PROPOSED AS PART OF THE SEQUENCE OF CONSTRUCTION.

LEGEND

- SOIL COMPACTION TESTING AREAS
- RECOMMENDED SOIL COMPACTION TEST LOCATION (APPROX. 1 / .5 ACRE)

BURLINGTON COUNTY TOWNSHIP OF EVESHAM
CAMDEN COUNTY TOWNSHIP OF VOORHEES
BLOCK 36, LOTS 9 & 10 N/F MONKEY DUCK ASSOCIATES
OFFICE USE
UP C21858
UP C8000
1 STORY BUSINESS
BLOCK 36, LOT 11 N/F VRI-W/J&J VOORHEES II, LLC (CURRENT OWNER AS PER REALQUEST S DB 9729, PG 1290) GNZ, LLC (NOT CURRENT OWNER AS P TITLE REPORT DB 6255 PG 109 & DB 7563, PG 634)
AREA SUBJECT TO COMPACTION TESTING (23,490 SF, 0.54 AC.)
BLOCK 220, LOT 8 N/F MONKEY DUCK ASSOCIATES
BENCHMARK #7 ELEV97.45 HUB & TACK SET
BLOCK 220, LOT 6 N/F DR. LEWIS L. HORVITZ & MARY ELIZABETH HORVITZ, D.B. 5151 PG. 761
RESIDENTIAL USE
TO BE VACATED UPON APPROVAL
BLOCK 220, LOT 9 N/F VRI-W/J&J VOORHEES II, LLC (CURRENT OWNER AS PER REALQUEST SEARCH DB 9729, PG 1290) GNZ, LLC (NOT CURRENT OWNER AS PER TITLE REPORT DB 6255 PG 109 & DB 7563, PG 634)
RESIDENTIAL USE
BLOCK 220, LOT 9.01 N/F ANTHONY G. SMEGLIN, D.B. 9935 PG. 587
PROPOSED Wawa 9507 5,051 SF (54 SPACES)
EXEMPT AREA (490 SF, 0.01 AC.)
AREA SUBJECT TO COMPACTION TESTING (9,393 SF, 0.22 AC.)
NJ ATE HIGHWAY ROUTE 73 (AKA MARLTON PIKE) (120 FEET WIDE - MARLTON ROAD) (SPEED LIMIT - 55 PER DEED)
BLOCK 36, LOT 12 N/F J&J DEVELOPMENT GROUP, LLC
RESIDENTIAL USE
1 STORY WOOD SIDED RANCHER
BLOCK 220, LOT 10 N/F J&J DEVELOPMENT GROUP, LLC
BLOCK 36, LOT 13 N/F J&J DEVELOPMENT GROUP, LLC
EXEMPT AREA (313 SF, 0.01 AC.)
BLOCK 36, LOT 11 AREA=181,320 ± SQ. FT. / 4.163± AC.
1 STORY GARAGE
1 STORY GARAGE
2 STORY BRICK & SIDING HOME
RESIDENTIAL USE
BLOCK 220, LOT 11 N/F J&J DEVELOPMENT GROUP, LLC (TRACT 1)
BLOCK 36, LOT 14
UP C26812
UP C10309
UP C11195
UNDEVELOPED
BLOCK 220, LOT 9.02 N/F REOVEN OANONO, D.B. 5286 PG. 597
EXEMPT AREA (283 SF, 0.01 AC.)
BLOCK 220, LOT 17 N/F MARLTON KOREAN ASSEMBLY OF GOD INC., D.B. 8895 PG. 637
BLOCK 220, LOT 14 N/F J&J DEVELOPMENT GROUP, LLC
RESIDENTIAL USE
EXEMPT AREA (204 SF, 0.01 AC.)
D.B. 7704 PG. 539
1 STORY TD BANK BUILDING
COMMERCIAL USE
UP 86223
UP C10308
UP SUPPORT
RELIGIOUS USE
RELIGIOUS USE
OFFICE USE
EXEMPT AREA (169 SF, 0.01 AC.)
1 STORY BARN
3 STORY BRICK & SIDING HOME
2 STORY HOUSE
BLOCK 220 LOT 12
BLOCK 220, LOT 12 N/F COMMERCE BANK, N.A., D.B. 4450 PG. 485
FORMERLY BLOCK 220, LOT 13
BENCHMARK #1 ELEV. 83.92 HUB & TACK SET
EXEMPT AREA (1,235 SF, 0.03 AC.)
HADDONFIELD – KRESSON ROAD (AKA COUNTY ROUTE 671) (AKA HADDONFIELD – MILFORD ROAD) (AKA KRESSON ROAD) (AKA HADDONFIELD ROAD) (VARIABLE WIDTH – AS PER DEED) (SPEED LIMIT – 45 MPH)
UP BT122NT
UP C10232
UP C10233
UP 128
2 STORY HOUSE
YOURSELF
DESIGNERS, DESIGNERS, OR ANY PERSON'S SURFACE ANYWHERE IN ANY STATE
11 below

GRAPHIC SCALE
-40 0 20 40 80 160
(IN FEET)
1 INCH = 40 FT.

Soil De-compaction and Testing Requirements

Soil Compaction Testing Requirements

1. Subgrade soils **prior to the application of topsoil** (see permanent seeding and stabilization notes for topsoil requirements) shall be free of excessive compaction to a depth of 6.0 inches to enhance the establishment of permanent vegetative cover.

2. Areas of the site which are subject to compaction testing and/or mitigation are **graphically denoted** on the certified soil erosion control plan.

3. **Compaction testing locations** are denoted on the plan. A copy of the plan or portion of the plan shall be used to mark locations of tests, and attached to the compaction mitigation verification form, available from the local soil conservation district. This form must be filled out and submitted prior to receiving a certificate of compliance from the district.

4. In the event that testing indicates compaction in excess of the maximum thresholds indicated for the simplified testing methods (see details below), the contractor/owner shall have the option to perform either (1) compaction mitigation over the entire mitigation area denoted on the plan (excluding exempt areas), or (2) perform additional, more detailed testing to establish the limits of excessive compaction whereupon only the excessively compacted areas would require compaction mitigation. Additional detailed testing shall be performed by a trained, licensed professional.

Compaction Testing Methods

A. Probing Wire Test (see detail)
B. Hand-held Penetrometer Test (see detail)
C .Tube Bulk Density Test (licensed professional engineer required
D. Nuclear Density Test (licensed professional engineer required)

Note: Additional testing methods which conform to ASTM standards and specifications, and which produce a dry weight, soil bulk density measurement may be allowed subject to District approval.

Soil compaction testing is not required if/when subsoil compaction remediation (scarification/tillage (6" minimum depth) or similar) is proposed as part of the sequence of construction.

Procedures for Soil Compaction Mitigation

Procedures shall be used to mitigate excessive soil compaction **prior to placement of topsoil** and establishment of permanent vegetative cover.

Restoration of compacted soils shall be through deep scarification/tillage (6" minimum depth) where there is no danger to underground utilities (cables, irrigation systems, etc.). In the alternative, another method as specified by a New Jersey Licensed Professional Engineer maybe substituted subject to District Approval.

Simplified Testing Methods

Probing Wire Test- 15.5 ga steel wire (survey flag)

Note: soil should be moist but not saturated. Do not test when soil is excessively dry or subject to freezing temperatures. Slow, steady downward pressure used to advance the wire.

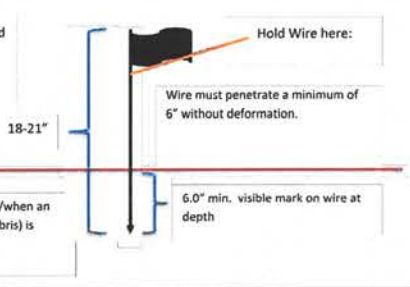

Handheld Soil Penetrometer Test

Note: soil should be moist but not saturated. Do not test when soil is excessively dry or subject to freezing temperatures. Slow, steady downward pressure used to advance the probe. Probe must penetrate at least 6" with less than 300 psi reading on the gauge.

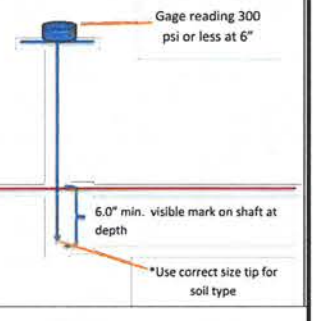

THIS PLAN SET IS FOR PERMITTING PURPOSES ONLY AND MAY NOT BE USED FOR CONSTRUCTION

Date	Comments	By
08/03/20	REV. PER TOWNSHIP ENGINEER & SEWER	RND

DYNAMIC ENGINEERING
LAND DEVELOPMENT CONSULTING • PERMITTING • GEOTECHNICAL • ENVIRONMENTAL • SURVEY • PLANNING & ZONING
1904 Main Street, Lake Como, NJ 07719 T: 732.974.0198 F: 732.974.3521 www.dynamicec.com
Additional offices conveniently located at:
Chester, New Jersey T: 908.879.9229 | Toms River, New Jersey T: 732.974.0198 | Newtown, Pennsylvania T: 267.685.0276
Allen, Texas T: 972.534.2100 | Austin, Texas T: 512.646.2646 | Houston, Texas T: 281.789.6400
Delray Beach, Florida T: 561.921.8570

TITLE: SOIL MANAGEMENT & PREPARATION PLAN

PROJECT: VOORHEES ROUTE 73 DEVELOPMENT GROUP, LLC
PROPOSED WAWA FOOD MARKET & FUELING STATION
BLOCK 36, LOT 11 & BLOCK 220, LOTS 9 & 16
NJSH ROUTE 73 AND KRESSON ROAD (CR 671)
TOWNSHIP OF EVESHAM (BURLINGTON COUNTY) & TOWNSHIP OF VOORHEES (CAMDEN COUNTY) NEW JERSEY

JOB No:	0744-12-010
DATE:	12/10/19
DRAWN BY:	KTK
SCALE: (H) 1"=40' (V)
DESIGNED BY:	MS
CHECKED BY:	MAW
SHEET No:	27 OF 35

MATTHEW SHARO — PROFESSIONAL ENGINEER
MARK A. WHITAKER — PROFESSIONAL ENGINEER
CONSTRUCTION CHECK — DATE
CONSTRUCTION CHECK — DATE

MUNICIPAL, COUNTY, STATE AND MUA DETAILS TO SUPERCEDE DYNAMIC ENGINEERING DETAILS WHERE APPLICABLE

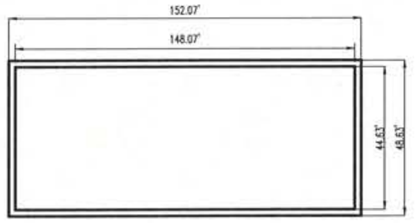

RAIN TANK DETAIL

NTS

	Stormwater System Details	
A	System Depth	4.20 FT 50.39 INCHES
B	System Length	148.07 FT 152.07 FT (EXCAVATION)
C	System Width	44.63 FT 48.63 FT (EXCAVATION)
	R-Tank Unit	TRIPLE
	Total No. of Units	2,146 UNITS
	System Capacity	26,353 CUBIC FEET

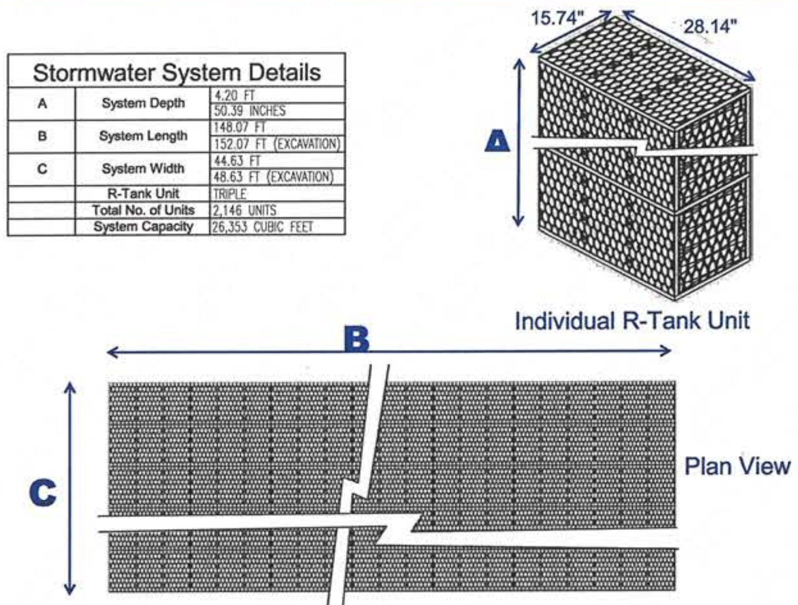

R-Tank System for:

FOR ADDITIONAL INFORMATION PLEASE CONTACT: ACF ENVIRONMENTAL 800-448-3636 www.acfenvironmental.com

You created this PDF from an application that is not licensed to print to novaPDF printer (http://www.novapdf.com)

SITE SPECIFIC DATA*			
PROJECT NUMBER	0744-12-010		
PROJECT NAME	WAWA FOOD MARKET & FUELING STATION		
PROJECT LOCATION	VOORHEES & EVESHAM, NJ		
STRUCTURE ID	STR #11		
WATER QUALITY FLOW RATE (CFS)			0.613
PEAK FLOW RATE (CFS)			10.590
PEAK STORM DURATION (YEARS)			100
PIPE DATA	I.E.	MATERIAL	DIAMETER
INFLOW PIPE 1	87.90	RCP	15"
OUTFLOW PIPE 1	87.40	RCP	15"
RIM ELEVATION	93.78		
SURFACE LOADING REQUIREMENT			HS20
FRAME AND COVER	(2) #24"; (2) #30"		
CORROSIVE SOIL CONDITIONS			NA
KNOWN GROUNDWATER ELEVATION			84.00
NOTES:			

*PER ENGINEER OF RECORD

KRAKEN FILTER PERFORMANCE DATA	
CARTRIDGE HEIGHT (IN)	30.75
CARTRIDGE FLOW RATE (GPM)	8.50
NUMBER OF CARTRIDGES	48
TOTAL TREATMENT FLOW RATE (CFS)	0.91
SEDIMENT STORAGE CAPACITY (CF)	16.61

INSTALLATION NOTES

1. CONTRACTOR TO PROVIDE ALL LABOR, EQUIPMENT, MATERIALS, AND INCIDENTALS REQUIRED TO OFFLOAD AND INSTALL THE KRAKEN FILTER UNIT AND APPURTENANCES IN ACCORDANCE WITH THIS DRAWING AND THE MANUFACTURER'S SPECIFICATIONS, UNLESS OTHERWISE STATED IN MANUFACTURER'S CONTRACT.
2. MANUFACTURER RECOMMENDS A 6" LEVEL ROCK BASE UNLESS SPECIFIED BY THE PROJECT ENGINEER. CONTRACTOR IS RESPONSIBLE FOR VERIFYING PROJECT ENGINEER'S RECOMMENDED BASE SPECIFICATIONS.
3. ALL PIPES MUST BE FLUSH WITH INSIDE SURFACE OF CONCRETE (PIPES CANNOT INTRUDE BEYOND FLUSH).
4. ALL GAPS AROUND PIPES SHALL BE SEALED WATERTIGHT WITH A NON-SHRINK GROUT PER MANUFACTURER'S STANDARD CONNECTION DETAIL AND SHALL MEET OR EXCEED REGIONAL PIPE CONNECTION STANDARDS.
5. CONTRACTOR RESPONSIBLE FOR INSTALLATION OF ALL PIPES, RISERS, AND MANHOLES. ALL COVERS SHALL BE SHIPPED LOOSE. CONTRACTOR TO GROUT ALL MANHOLES TO MATCH FINISHED SURFACE UNLESS SPECIFIED OTHERWISE.

1:40 SCALE

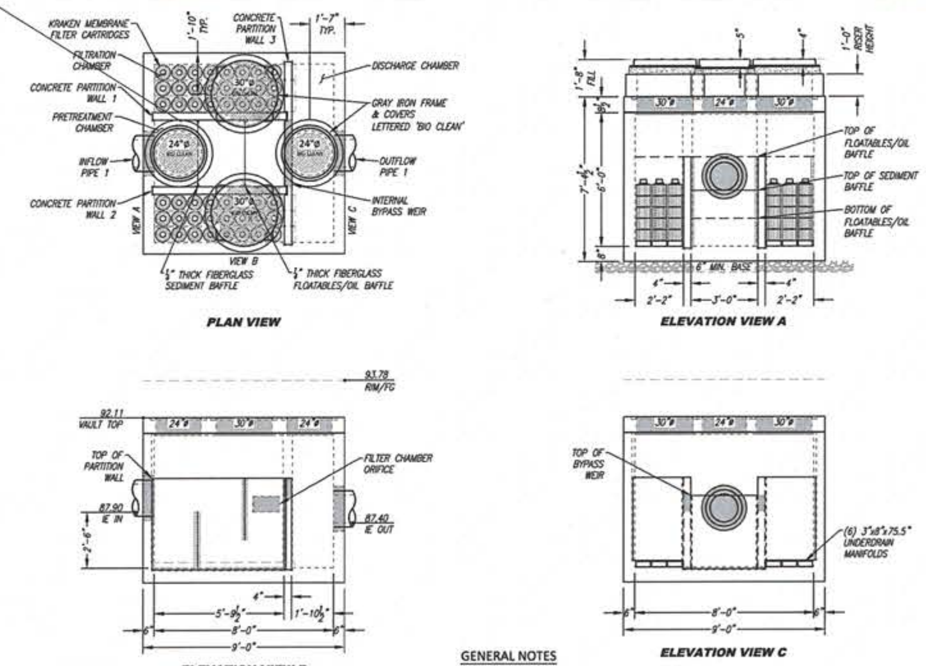

GENERAL NOTES

1. BIO CLEAN TO PROVIDE ALL MATERIALS UNLESS OTHERWISE NOTED.
2. ALL DIMENSIONS, ELEVATIONS, SPECIFICATIONS, AND CAPACITIES ARE SUBJECT TO CHANGE. FOR PROJECT SPECIFIC DRAWINGS DETAILING EXACT DIMENSIONS, WEIGHTS, AND ACCESSORIES PLEASE CONTACT BIO CLEAN.

PROPRIETARY AND CONFIDENTIAL:

Bio Clean — A Forterra Company

KRAKEN KF-8-8-72
MEMBRANE FILTRATION SYSTEM WITH PRETREATMENT
STANDARD DETAIL

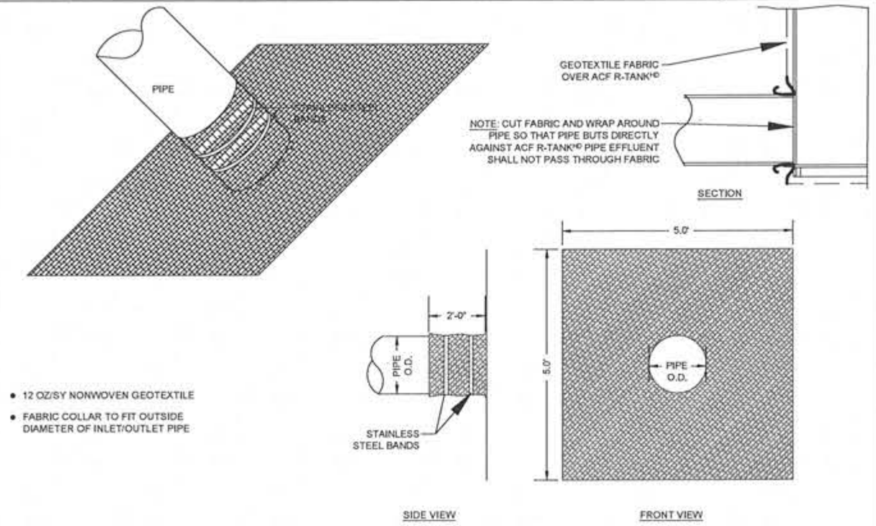

- 12 OZ/SY NONWOVEN GEOTEXTILE
- FABRIC COLLAR TO FIT OUTSIDE DIAMETER OF INLET/OUTLET PIPE

ACF ENVIRONMENTAL

FABRIC PIPE BOOT FOR R-TANK^HD

FOR ADDITIONAL INFORMATION PLEASE CONTACT ACF ENVIRONMENTAL, 1-800-448-3636, www.acfenvironmental.com

MAINTENANCE PORT

THIS PORT IS USED TO PUMP WATER INTO THE SYSTEM AND RE-SUSPEND ACCUMULATED SEDIMENT SO THAT IT MAY BE PUMPED OUT. MINIMUM REQUIRED MAINTENANCE INCLUDES A QUARTERLY INSPECTION DURING THE FIRST YEAR OF OPERATION AND A YEARLY INSPECTION THEREAFTER. FLUSH AS NEEDED.

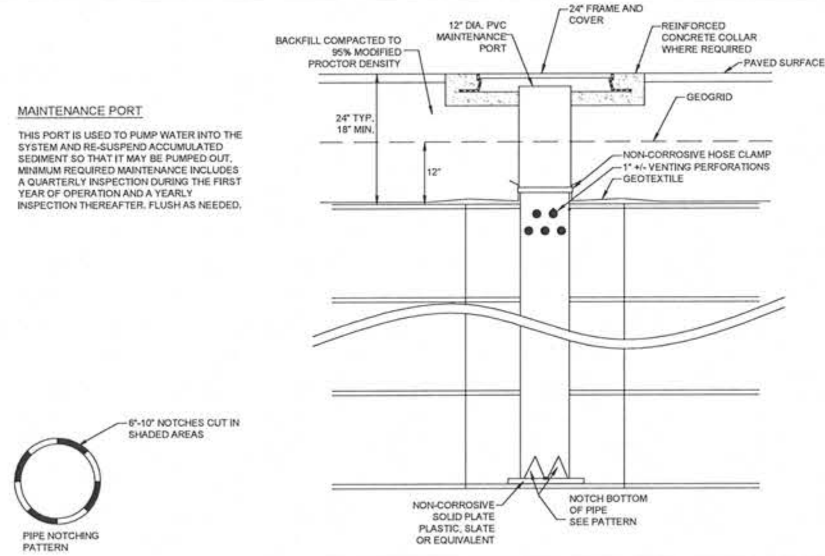

ACF ENVIRONMENTAL

R-TANK^HD TYPICAL MAINTENANCE PORT

FOR ADDITIONAL INFORMATION PLEASE CONTACT ACF ENVIRONMENTAL, 1-800-448-3636, www.acfenvironmental.com

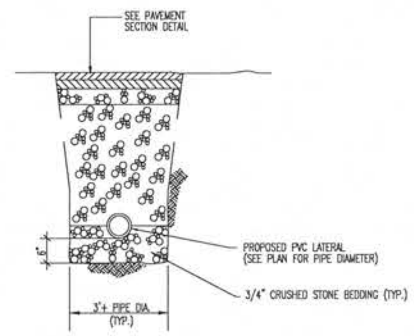

NOTE: PAVEMENT SECTION TO MATCH, AT MINIMUM, ADJOINING PAVEMENT.

SANITARY SEWER TRENCH DETAIL

NOT TO SCALE

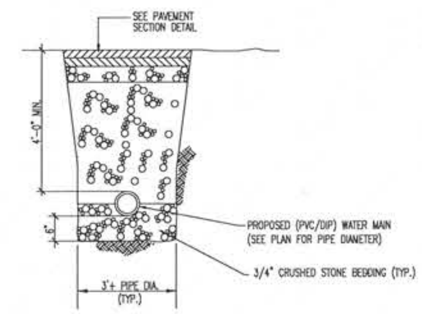

NOTE: PAVEMENT SECTION TO MATCH, AT MINIMUM, ADJOINING PAVEMENT.

WATER SERVICE TRENCH DETAIL

NOT TO SCALE

END VIEW OF PIPE/FABRIC CONNECTION. CUT AN "X" IN THE FABRIC SLIGHTLY LARGER THAN PIPE. PULL THE FABRIC AROUND THE PIPE TO CREATE THE "BOOT" AND THEN SECURE WITH A HOSE-CLAMP.

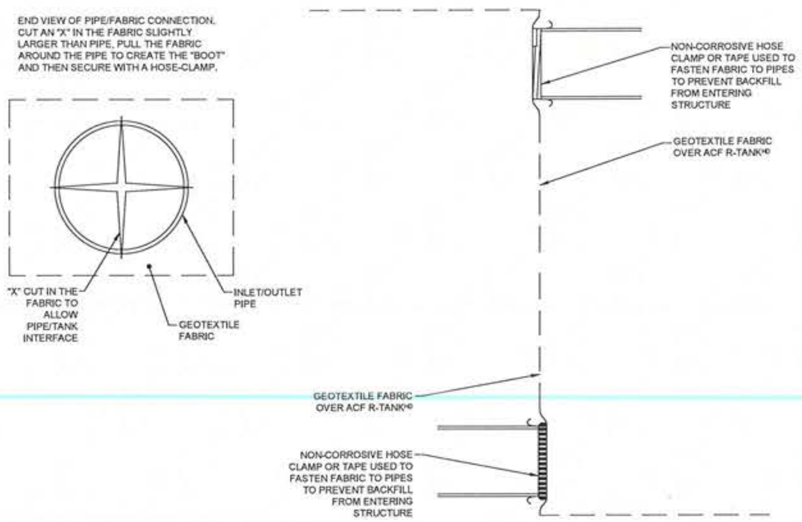

ACF ENVIRONMENTAL

R-TANK^HD TYPICAL TANK INLET/OUTLET DETAIL

TOTAL COVER: 20" MINIMUM AND 84" MAXIMUM. FIRST 12" MUST BE FREE DRAINING BACKFILL (SPEC SECTION 2.03B): STONE <1.5" OR SOIL (USCS CLASS GW, GP, SW OR SP). ADDITIONAL FILL MAY BE STRUCTURAL FILL (SPEC SECTION 2.03C): STONE OR SOIL (USCS CLASS SM, SP, SW, GM, GP OR GW) WITH MAX CLAY CONTENT<10%, MAX 25% PASSING NO. 200 SIEVE, AND MAX PLASTICITY INDEX OF 4. A MIN. 12" COVER MUST BE MAINTAINED BETWEEN BACKFILL EQUIPMENT AND THE TOP OF THE R-TANK™ SYSTEM AT ALL TIMES. TOTAL HEIGHT OF TOP BACKFILL SHOULD NOT EXCEED 7'. CONTACT ACF ENVIRONMENTAL IF MORE THAN 7' OR LESS THAN 20" OF TOP BACKFILL IS REQUIRED (FROM TOP OF TANK TO TOP OF PAVEMENT).

NOTES:

- FOR COMPLETE MODULE DATA, SEE APPROPRIATE R-TANK^HD MODULE SHEET
- INSTALLATIONS PER THIS DETAIL MEET GUIDELINES OF H20 LOADING PER THE 1983, 13TH EDITION OF THE AMERICAN ASSOCIATION OF STATE, HIGHWAY AND TRAFFIC OFFICIALS (AASHTO) STANDARD SPECIFICATIONS
- PRE-TREATMENT STRUCTURES NOT SHOWN

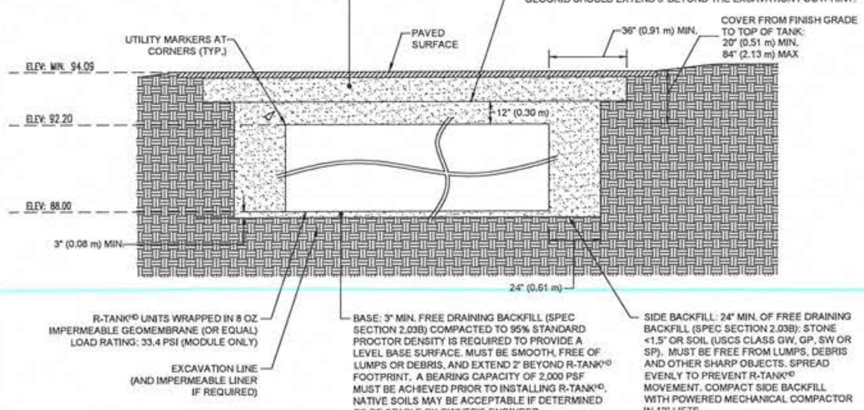

MARCH 2015 REV

ACF ENVIRONMENTAL

R-TANK^HD - HS-20 LOADS

PROTECT YOURSELF

ALL STATES REQUIRE NOTIFICATION OF EXCAVATORS, DESIGNERS, OR ANY PERSON PREPARING TO DISTURB THE EARTH'S SURFACE ANYWHERE IN ANY STATE

811 Know what's below. Call before you dig.

Date	Comments	By
08/03/20	REV. PER TOWNSHIP ENGINEER & SEWER COMMENTS	RND

THIS PLAN SET IS FOR PERMITTING PURPOSES ONLY AND MAY NOT BE USED FOR CONSTRUCTION

DYNAMIC ENGINEERING
LAND DEVELOPMENT CONSULTING • PERMITTING • GEOTECHNICAL • ENVIRONMENTAL • SURVEY • PLANNING & ZONING
1904 Main Street, Lake Como, NJ 07719, T: 732.974.0198, F: 732.974.3521, www.dynamicec.com
Additional offices conveniently located at:
Chester, New Jersey T: 908.879.9229 | Toms River, New Jersey T: 732.974.0198 | Newtown, Pennsylvania T: 267.685.0276
Allen, Texas T: 972.534.2100 | Austin, Texas T: 512.646.2646 | Houston, Texas T: 281.789.6400
Delray Beach, Florida T: 561.921.8570

TITLE: CONSTRUCTION DETAILS

PROJECT: **VOORHEES ROUTE 73 DEVELOPMENT GROUP, LLC**
PROPOSED WAWA FOOD MARKET & FUELING STATION
BLOCK 36, LOT 11 & BLOCK 220, LOTS 9 & 16
NJSH ROUTE 73 AND KRESSON ROAD (CR 671)
TOWNSHIP OF EVESHAM (BURLINGTON COUNTY) & TOWNSHIP OF VOORHEES (CAMDEN COUNTY) NEW JERSEY

JOB No:	0744-12-010
DATE:	12/10/19
DRAWN BY:	KTK
SCALE:	(H) NOT TO (V) SCALE
DESIGNED BY:	MS
CHECKED BY:	MAW
SHEET No:	28 OF 35

MATTHEW SHARO — PROFESSIONAL ENGINEER

MARK A. WHITAKER — PROFESSIONAL ENGINEER

CONSTRUCTION CHECK — DATE

CONSTRUCTION CHECK — DATE

MUNICIPAL, COUNTY, STATE AND MUA DETAILS TO SUPERCEDE DYNAMIC ENGINEERING DETAILS WHERE APPLICABLE

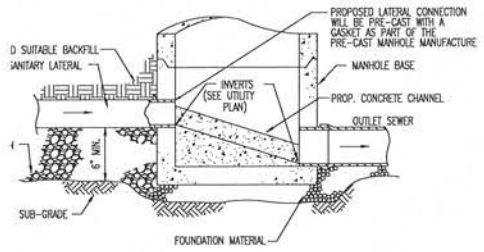

1. MAXIMUM DROP BETWEEN INCOMING AND OUTGOING PIPES TO BE 2'.
2. OVER 2' DROP MANHOLE REQUIRED.

AL TO PROPOSED MH CONNECTION DETAIL

NOT TO SCALE

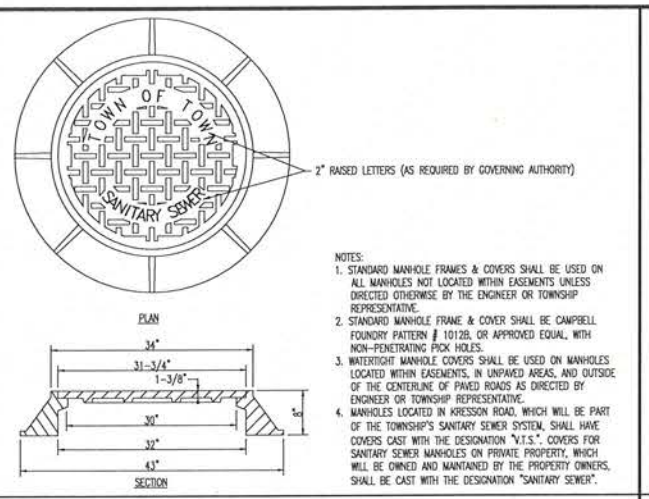

NOTES:
1. STANDARD MANHOLE FRAMES & COVERS SHALL BE USED ON ALL MANHOLES NOT LOCATED WITHIN EASEMENTS UNLESS DIRECTED OTHERWISE BY THE ENGINEER OR TOWNSHIP REPRESENTATIVE.
2. STANDARD MANHOLE FRAME & COVER SHALL BE CAMPBELL FOUNDRY PATTERN # 1012B, OR APPROVED EQUAL, WITH NON-PENETRATING PICK HOLES.
3. WATERTIGHT MANHOLE COVERS SHALL BE USED ON MANHOLES LOCATED WITHIN EASEMENTS, IN UNPAVED AREAS, AND OUTSIDE OF THE CENTERLINE OF PAVED ROADS AS DIRECTED BY ENGINEER OR TOWNSHIP REPRESENTATIVE.
4. MANHOLES LOCATED IN KRESSON ROAD, WHICH WILL BE PART OF THE TOWNSHIP'S SANITARY SEWER SYSTEM, SHALL HAVE COVERS CAST WITH THE DESIGNATION "K.T.S.". COVERS FOR SANITARY SEWER MANHOLES ON PRIVATE PROPERTY, WHICH WILL BE OWNED AND MAINTAINED BY THE PROPERTY OWNERS, SHALL BE CAST WITH THE DESIGNATION "SANITARY SEWER".

SANITARY MANHOLE FRAME DETAIL

NOT TO SCALE

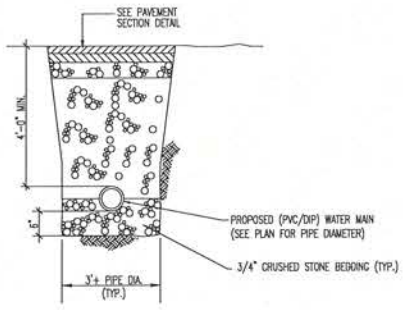

NOTE: PAVEMENT SECTION TO MATCH, AT MINIMUM, ADJOINING PAVEMENT.

WATER SERVICE TRENCH DETAIL

NOT TO SCALE

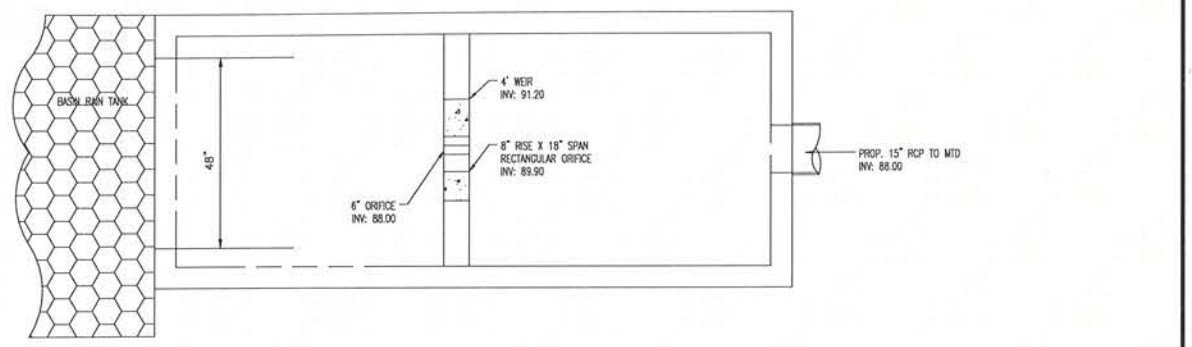

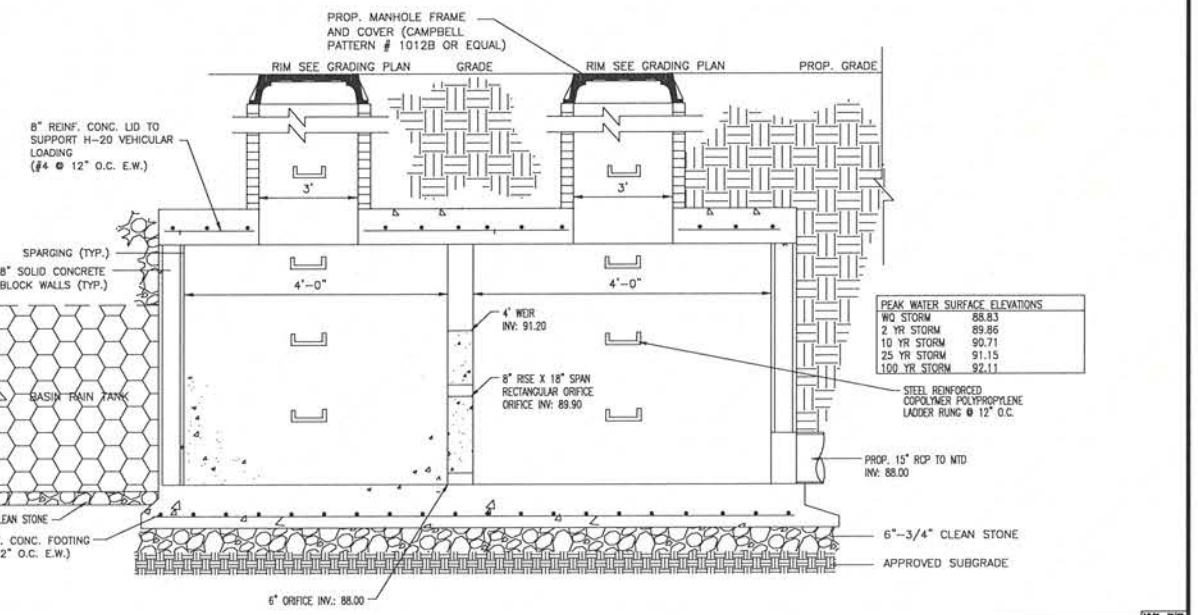

PEAK WATER SURFACE ELEVATIONS	
NO STORM	88.83
2 YR STORM	89.86
10 YR STORM	90.71
25 YR STORM	91.15
100 YR STORM	92.11

OUTLET STRUCTURE DETAIL

NOT TO SCALE

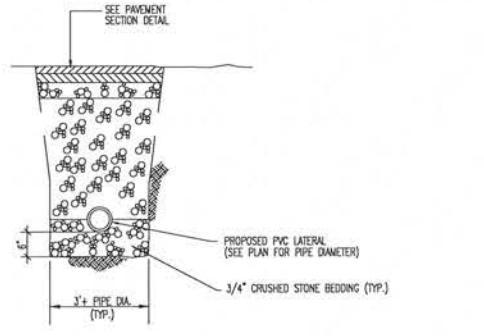

NOTE: PAVEMENT SECTION TO MATCH, AT MINIMUM, ADJOINING PAVEMENT.

ITARY SEWER TRENCH DETAIL

NOT TO SCALE

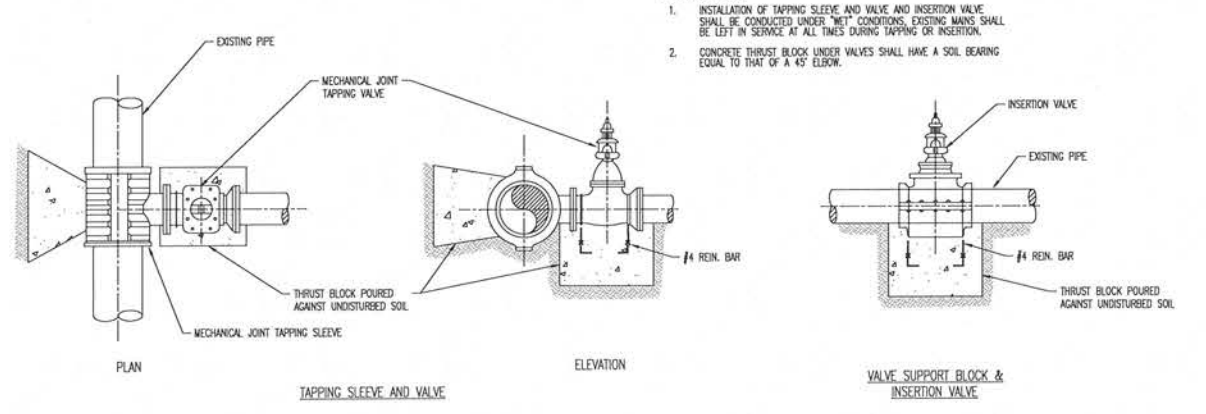

TAPPING NOTES:
1. INSTALLATION OF TAPPING SLEEVE AND VALVE AND INSERTION VALVE SHALL BE CONDUCTED UNDER "WET" CONDITIONS, EXISTING MAINS SHALL BE LEFT IN SERVICE AT ALL TIMES DURING TAPPING OR INSERTION.
2. CONCRETE THRUST BLOCK UNDER VALVES SHALL HAVE A SOIL BEARING EQUAL TO THAT OF A 45° ELBOW.

TAPPING SLEEVE AND VALVE

VALVE SUPPORT BLOCK & INSERTION VALVE

WET TAP DETAIL

NOT TO SCALE

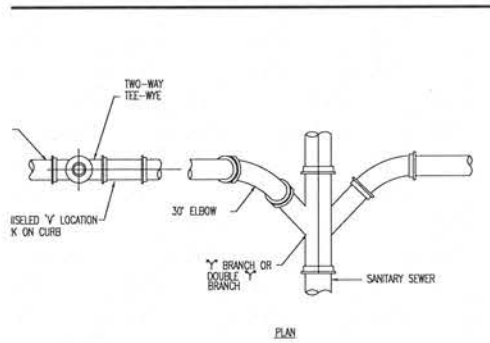

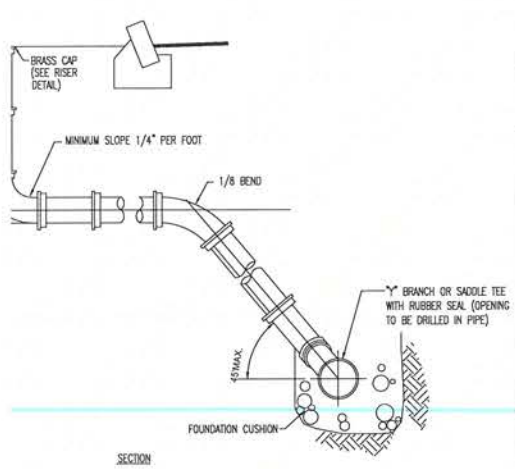

SEE TO UTILITY PLAN FOR PIPE SIZES, VERIFY WITH ARCHITECTURAL PLANS. CONTACT ENGINEER WITH ANY CONFLICTS PRIOR TO ANY SEWER CONNECTION WORK.

STANDARD CONNECTION DETAIL

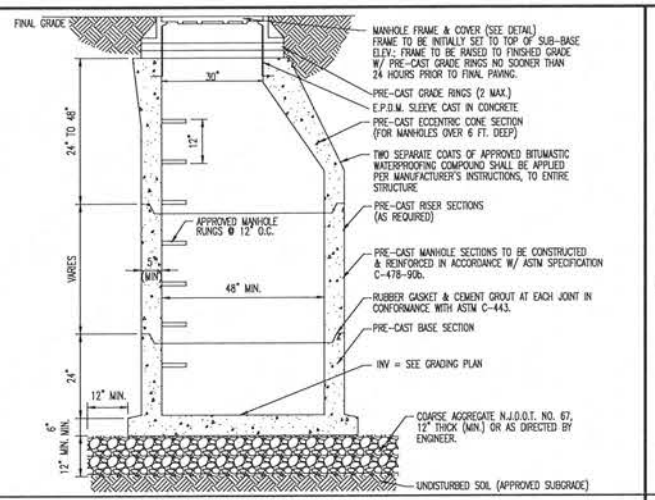

TYPICAL PRECAST STORM MANHOLE

NOT TO SCALE

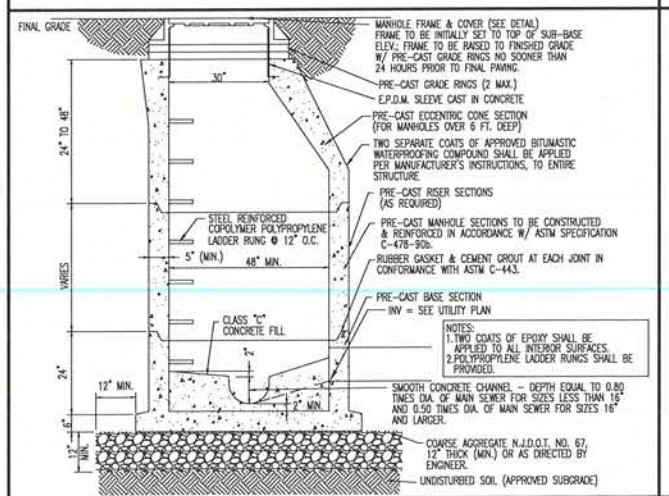

PRECAST SANITARY MANHOLE

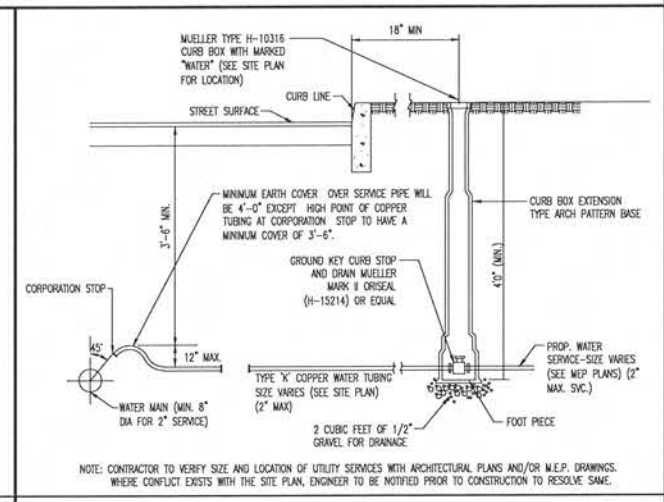

NOTE: CONTRACTOR TO VERIFY SIZE AND LOCATION OF UTILITY SERVICES WITH ARCHITECTURAL PLANS AND/OR M.E.P. DRAWINGS. WHERE CONFLICT EXISTS WITH THE SITE PLAN, ENGINEER TO BE NOTIFIED PRIOR TO CONSTRUCTION TO RESOLVE SAME.

WATER SERVICE CONNECTION

NOT TO SCALE

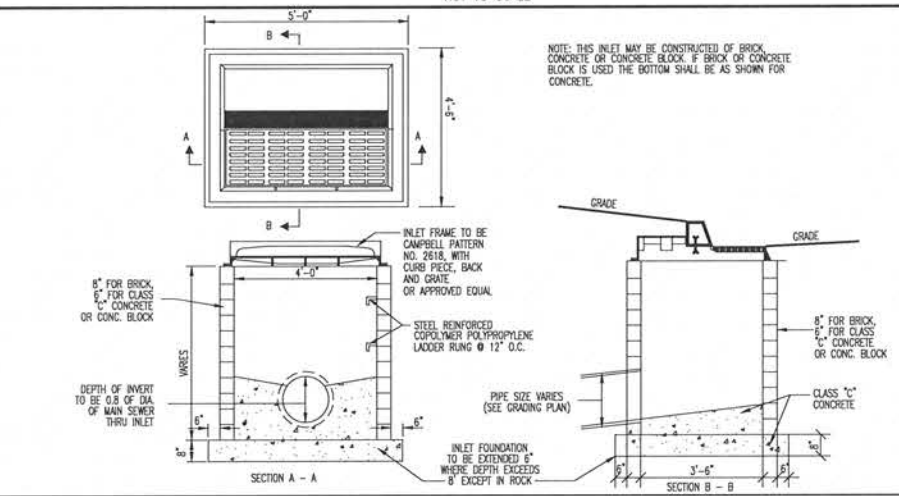

TYPE B INLET DETAIL

NOT TO SCALE

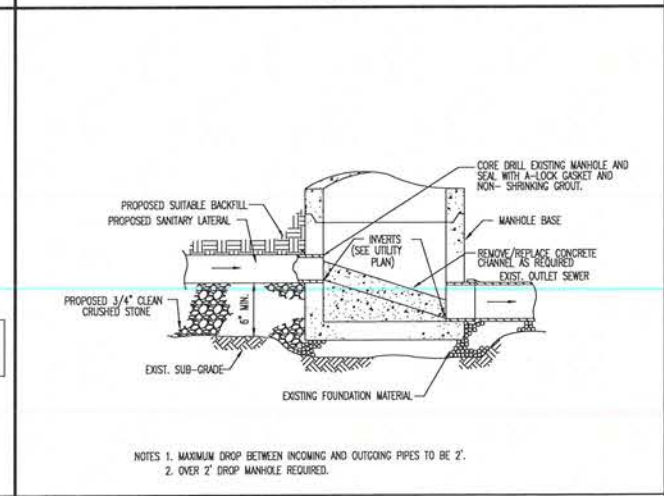

NOTES 1. MAXIMUM DROP BETWEEN INCOMING AND OUTGOING PIPES TO BE 2'.
2. OVER 2' DROP MANHOLE REQUIRED.

SAN. LATERAL TO EXIST. MH CONNECTION DETAIL

THIS PLAN SET IS FOR PERMITTING PURPOSES ONLY AND MAY NOT BE USED FOR CONSTRUCTION

PROTECT YOURSELF
ALL STATES REQUIRE NOTIFICATION OF EXCAVATORS, DESIGNERS, OR ANY PERSON PREPARING TO DISTURB THE EARTH'S SURFACE ANYWHERE IN ANY STATE
811
Know what's below
Call before you dig.

No.	Date	Comments	By
1	08/03/20	REV. PER TOWNSHIP ENGINEER & SEWER COMMENTS	RND

DYNAMIC ENGINEERING
LAND DEVELOPMENT CONSULTING • PERMITTING • GEOTECHNICAL • ENVIRONMENTAL • SURVEY • PLANNING & ZONING
1904 Main Street, Lake Como, NJ 07719
T: 732.974.0198 F: 732.974.3521 www.dynamiceo.com
Additional offices conveniently located at:
Chester, New Jersey T: 908.879.9229 | Toms River, New Jersey T: 732.974.0198 | Newtown, Pennsylvania T: 267.685.0276
Allen, Texas T: 972.534.2100 | Austin, Texas T: 512.346.2646 | Houston, Texas T: 281.789.6400
Delray Beach, Florida T: 561.991.8570

TITLE: CONSTRUCTION DETAILS

PROJECT: VOORHEES ROUTE 73 DEVELOPMENT GROUP, LLC
PROPOSED WAWA FOOD MARKET & FUELING STATION
BLOCK 36, LOT 11 & BLOCK 220, LOTS 9 & 16
NJSH ROUTE 73 AND KRESSON ROAD (CR 671)
TOWNSHIP OF EVESHAM (BURLINGTON COUNTY) & TOWNSHIP OF VOORHEES (CAMDEN COUNTY) NEW JERSEY

JOB No:	0744-12-010
DATE:	12/10/19
DRAWN BY:	KTK
SCALE:(H) NOT TO (V) SCALE	
DESIGNED BY:	MS
CHECKED BY:	MAW
SHEET No:	29 OF 35

MATTHEW SHARO — PROFESSIONAL ENGINEER — CONSTRUCTION CHECK — DATE

MARK A. WHITAKER — PROFESSIONAL ENGINEER — CONSTRUCTION CHECK — DATE

MUNICIPAL, COUNTY, STATE AND MUA DETAILS TO SUPERCEDE DYNAMIC ENGINEERING DETAILS WHERE APPLICABLE

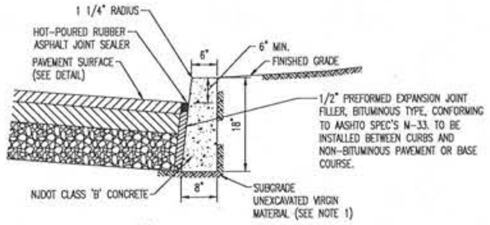

6" CURB REVEAL

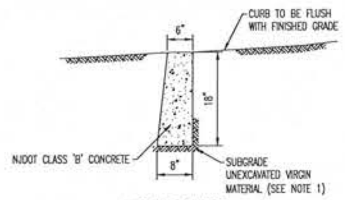

FLUSH CURB

NOTES:

1. ANY EXCAVATION BELOW DESIRED GRADE DUE TO OVER EXCAVATION OR WET SOIL CONDITIONS SHALL BE BACKFILLED WITH 3/4" CLEAN CRUSHED STONE. ALL SUBGRADES SHALL BE APPROVED BY THE TOWNSHIP ENGINEER PRIOR TO POURING.
2. TRANSVERSE JOINTS 1/2" WIDE SHALL BE INSTALLED IN THE CURB 20'-0" APART AND SHALL BE FILLED WITH PREFORMED, BITUMINOUS-IMPREGNATED FIBER JOINT FILLER, COMPLYING WITH THE REQUIREMENTS OF AASHTON-213, RECESSED 1/4" FROM THE FRONT FACE AND TOP OF THE CURB.
3. DUMMY JOINTS (FORMED) SHALL BE INSTALLED MIDWAY BETWEEN EXPANSION JOINTS.
4. WIDTH OF JOINT FILLER STRIP EQUAL TO THE THICKNESS OF THE PAVEMENT LESS 1/2".
5. THESE SPECIFICATIONS ALSO MEET RSIS DESIGN STANDARDS.

CONCRETE CURB DETAIL
NOT TO SCALE

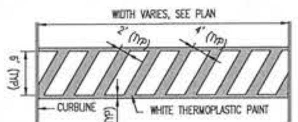

PAINTED CROSSWALK STRIPING DETAIL
NOT TO SCALE

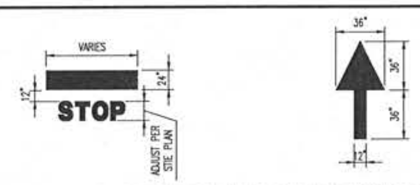

NOTE: ARROWS AND WORDS CAN BE ARRANGED IN OTHER COMBINATIONS THAN THOSE ILLUSTRATED HERE TO ACHIEVE DESIRED RESULT. ALL PAINT TO BE WHITE THERMOPLASTIC.

PAINTED MARKING DETAILS
NOT TO SCALE

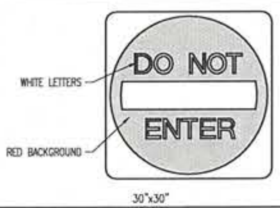

MUTCD R5-1 SIGN DETAIL
NOT TO SCALE

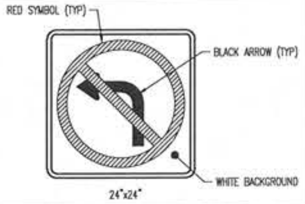

MUTCD R3-2 SIGN DETAIL
NOT TO SCALE

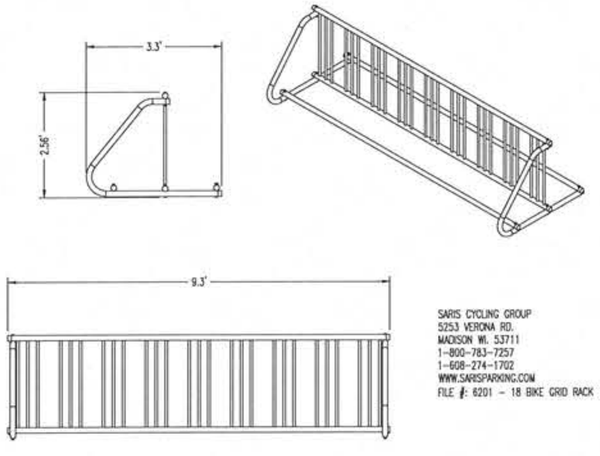

SARIS CYCLING GROUP
5253 VERONA RD.
MADISON WI. 53711
1-800-783-7257
1-608-274-1702
WWW.SARISPARKING.COM
FILE #: 6201 - 18 BIKE GRID RACK

BIKE GRID RACK DETAIL
NOT TO SCALE

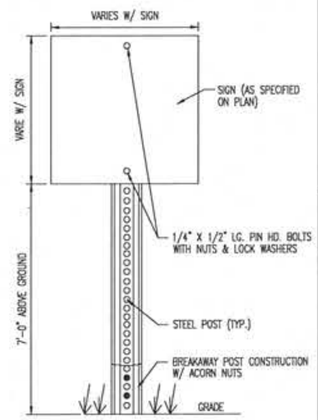

SIGN POST DETAIL
NOT TO SCALE

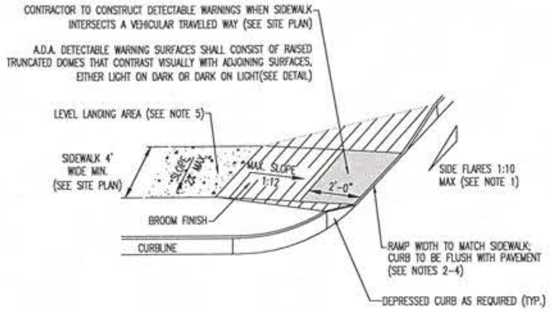

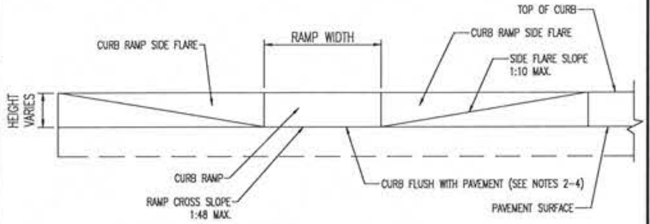

TYPICAL ELEVATION FOR DEPRESSED CURB

NOTES:

1.) WHERE A PEDESTRIAN CIRCULATION PATH CROSSED THE CURB RAMP, FLARE SIDES SHALL BE PROVIDED AT A SLOPE NO STEEPER THEN 1:10.
2.) CONSTRUCT DEPRESSED CURB FOR CURB RAMPS FLUSH TO ADJACENT PAVEMENT. GRADE FLOW LINE TO ENSURE POSITIVE DRAINAGE AND PREVENT PONDING. FOR LEVEL TURNING SPACES BEHIND DEPRESSED CURB, ADJUST SLOPES TO PROVIDE POSITIVE DRAINAGE.
3.) CURB RAMPS MAY NOT EXTEND INTO ANY PORTION OF THE PARKING SPACE OR ASSOCIATED STRIPED ISLAND.
4.) COUNTER SLOPES OF ADJOINING GUTTERS AND PAVEMENT SHALL NOT BE STEEPER THAN 1:20 WITH A MAX. CROSS SLOPE OF 2%.
5.) A LEVEL LANDING AREA (MAX. SLOPE 2% IN ANY DIRECTION) SHALL BE PROVIDED AT THE TOP OF THE RAMP. THE LANDING CLEAR LENGTH SHALL BE 36" MIN AND THE CLEAR WIDTH SHALL BE AS WIDE AS THE RAMP.
6.) CURB RAMPS, PAVEMENT MARKINGS & APPLICABLE SIGNAGE SHALL BE CONSTRUCTED IN ACCORDANCE WITH THE LATEST A.D.A. ACCESSIBILITY GUIDELINES.

A.D.A. PERPENDICULAR CURB RAMP DETAIL (W/ FLARE SIDES)
NOT TO SCALE

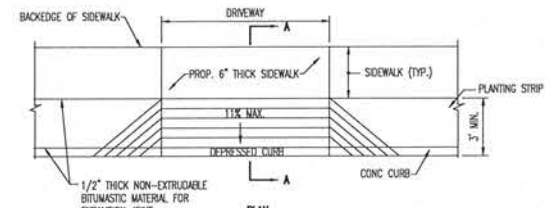

PLAN

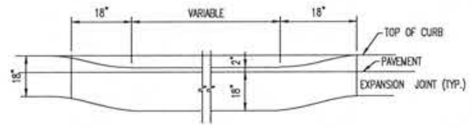

ELEVATION

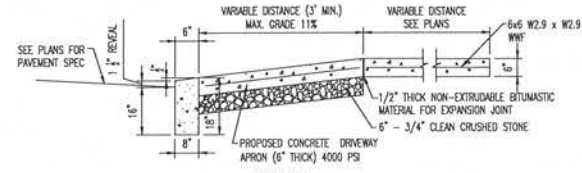

SECTION A-A

DEPRESSED CURB & CONCRETE APRON AT DRIVEWAY DETAIL
NOT TO SCALE

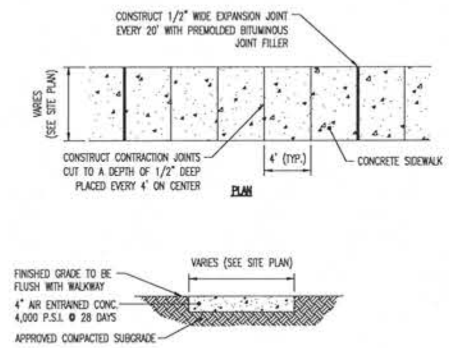

NOTE:

1. MAX. CROSS SLOPE 1/4" PER FOOT PITCHED TOWARDS ROADWAY.
2. PROVIDE 1/2" WIDE PREMOLDED BITUMINOUS EXPANSION JOINT AT 20' INTERVALS.
3. REFER TO SITE PLAN FOR SIDEWALK WIDTH.
4. PROVIDE A BROOM FINISH TO PROVIDE A SLIP RESISTANT WEARING SURFACE IN ACCORDANCE WITH A.D.A. REGULATIONS. FINISH THE EDGES OF THE GROOVES USING AN EDGING TOOL WITH A 1/4" RADIUS.

SIDEWALK DETAIL
NOT TO SCALE

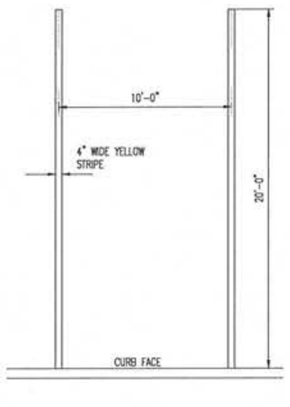

PARKING STALL STRIPING DETAIL
NOT TO SCALE

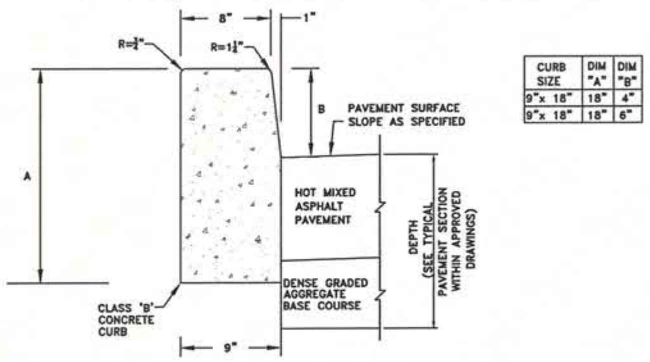

CURB SIZE	DIM "A"	DIM "B"
9"x 18"	18"	4"
9"x 18"	18"	6"

NOTES:

1. EXPANSION JOINTS 1/2" WIDE IN THE CURB SHALL BE PROVIDED AT APPROXIMATELY EQUAL DISTANCES OF NOT MORE THAN 20' BETWEEN THE JOINTS.
2. THE COST OF EXPANSION JOINTS IN THE CURB AND DENSE GRADED AGGREGATE BEDDING SHALL BE INCLUDED IN THE UNIT PRICE BID FOR THE CURB.
3. CONCRETE SHALL BE CLASS B WITH 28 DAY COMPRESSIVE STRENGTH OF 4500 PSI, AND 6% ±1.5 AIR ENTRAINMENT.

DETAIL (1) STANDARD 8"X9"X18" CONCRETE VERTICAL CURB DETAIL

N.T.S.

CAMDEN COUNTY DEPARTMENT OF PUBLIC WORKS | CAMDEN COUNTY DEPARTMENT OF PUBLIC WORKS | TITLE: COUNTY STANDARD 8"X9"X18" CONCRETE VERTICAL CURB DETAIL | DATE: MAR 2014 | DRAWN BY: T.A.P | APPROVED BY: K.B/A.L. | SHT. NO. 1 / 1

PROTECT YOURSELF

ALL STATES REQUIRE NOTIFICATION OF EXCAVATORS, DESIGNERS, OR ANY PERSON PREPARING TO DISTURB THE EARTH'S SURFACE ANYWHERE IN ANY STATE

811 Know what's below. Call before you dig.

Date	Comments	By
08/03/20	REV. PER TOWNSHIP ENGINEER & SEWER COMMENTS	RND

THIS PLAN SET IS FOR PERMITTING PURPOSES ONLY AND MAY NOT BE USED FOR CONSTRUCTION

DYNAMIC ENGINEERING
LAND DEVELOPMENT CONSULTING • PERMITTING • GEOTECHNICAL • ENVIRONMENTAL • SURVEY • PLANNING & ZONING

1904 Main Street
Lake Como, NJ 07719
T: 732.974.0198
F: 732.974.3521
www.dynamicec.com

Additional offices conveniently located at:
Chester, New Jersey T: 908.879.9229 | Toms River, New Jersey T: 732.974.0198 | Newtown, Pennsylvania T: 267.685.0276
Allen, Texas T: 972.534.2100 | Austin, Texas T: 512.646.2646 | Houston, Texas T: 281.789.6400
Delray Beach, Florida T: 561.921.8570

TITLE: CONSTRUCTION DETAILS

PROJECT: VOORHEES ROUTE 73 DEVELOPMENT GROUP, LLC
PROPOSED WAWA FOOD MARKET & FUELING STATION
BLOCK 36, LOT 11 & BLOCK 220, LOTS 9 & 16
NJSH ROUTE 73 AND KRESSON ROAD (CR 671)
TOWNSHIP OF EVESHAM (BURLINGTON COUNTY) & TOWNSHIP OF VOORHEES (CAMDEN COUNTY) NEW JERSEY

JOB No: 0744-12-010
DATE: 12/10/19
DRAWN BY: KTK
DESIGNED BY: MS
CHECKED BY: MAW
SCALE: (H) NOT TO (V) SCALE

MATTHEW SHARO — PROFESSIONAL ENGINEER
MARK A. WHITAKER — PROFESSIONAL ENGINEER

CONSTRUCTION CHECK — DATE
CONSTRUCTION CHECK — DATE

SHEET No: 30 OF 35

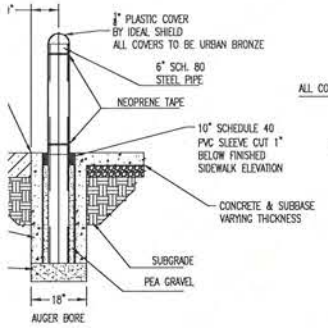

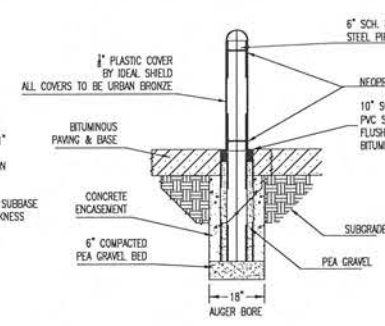

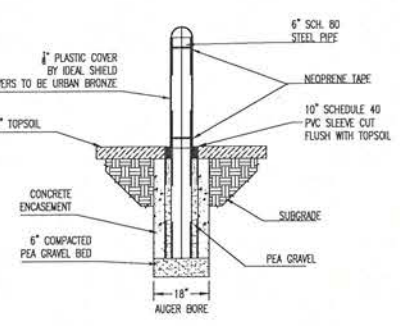

RETE AREAS | **BITUMINOUS AREAS** | **LANDSCAPED AREAS**

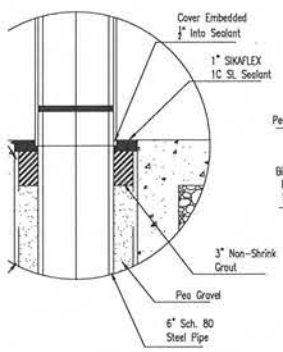

IAL DETAILS AND K/GROUT DETAIL CONCRETE AREAS

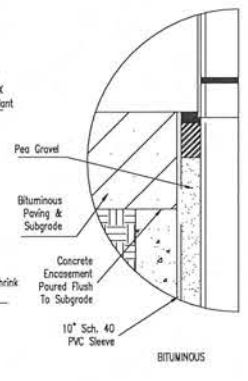

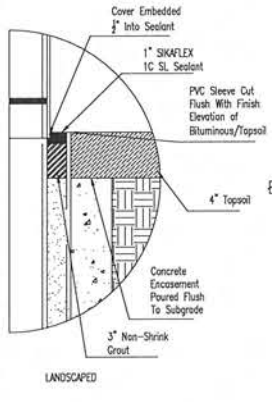

CAULK/GROUT DETAIL FOR LANDSCAPED & BITUMINOUS AREAS

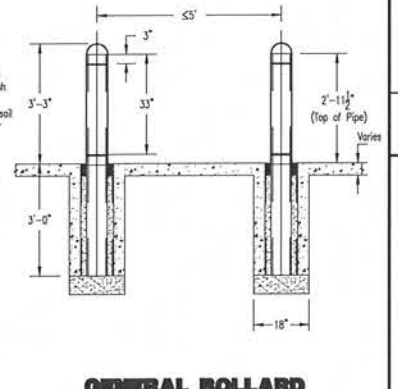

GENERAL BOLLARD DIMENSIONS AND SPACING AROUND BUILDING

WAWA BOLLARD DETAIL
(NEW CONSTRUCTION)
NOT TO SCALE

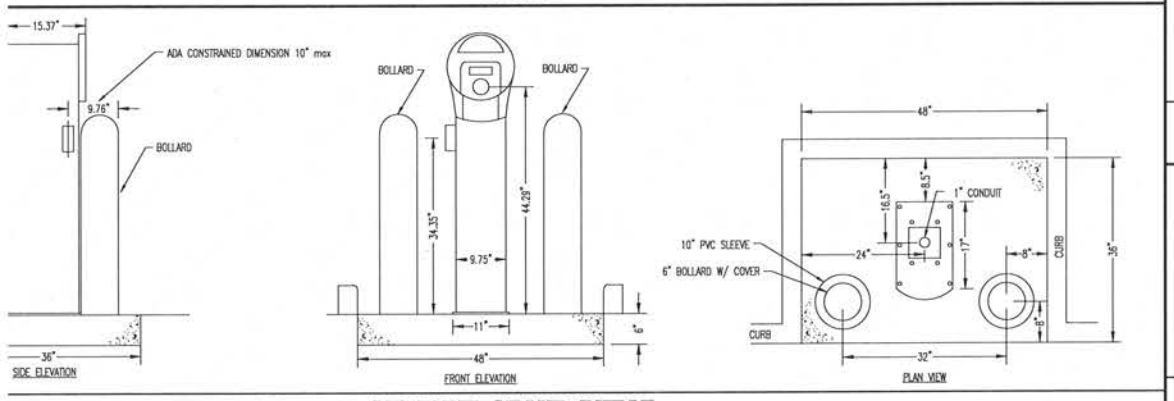

AIR PUMP STAND DETAIL
(EXCEL AIR MACHINE MODEL #SC05)
NOT TO SCALE

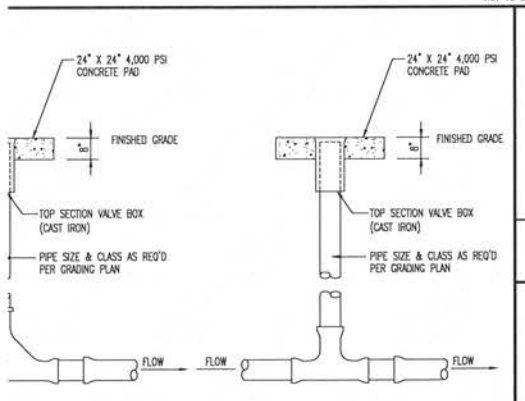

CLEAN OUT DETAIL
NOT TO SCALE

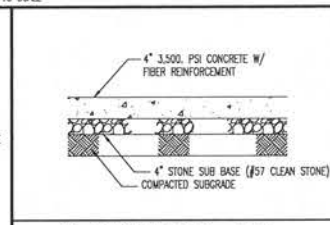

SIDEWALK DETAIL
SEE ARCH. SPEC. FOR COMPLETE CONCRETE DETAILS

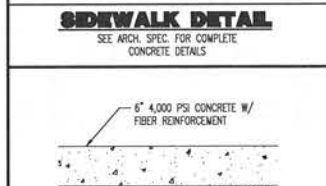

PARKING, CANOPY, & TRASH MAT
SEE ARCH. SPEC. FOR COMPLETE CONCRETE DETAILS

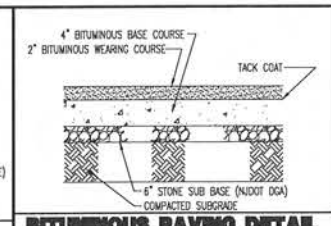

BITUMINOUS PAVING DETAIL
NOT TO SCALE

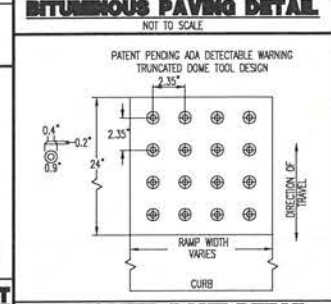

TRUNCATED DOME DETAIL
NOT TO SCALE

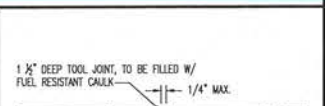

AT DETAIL

CONTROL JOINT DETAIL

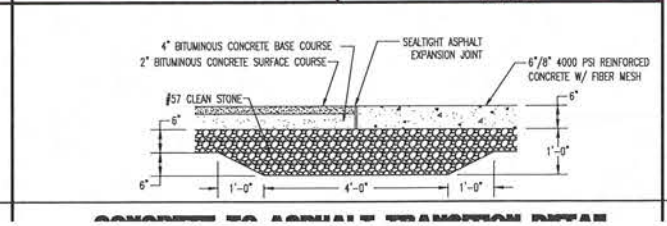

CONCRETE TO ASPHALT TRANSITION DETAIL

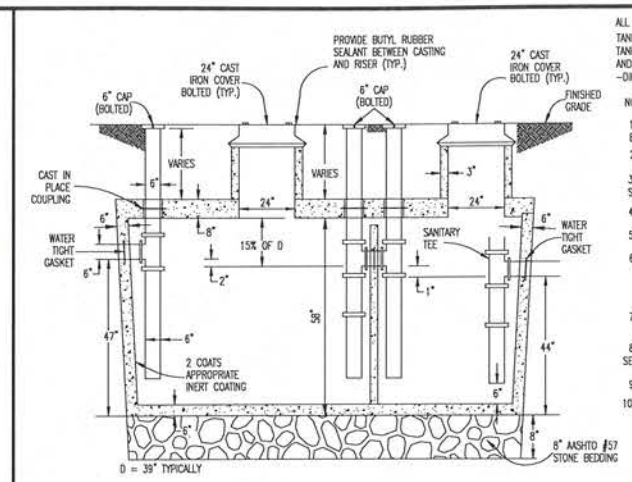

ALL INLET AND OUTLET PIPES SHALL BE INSTALLED NO MORE THAN 6" FROM THE BOTTOM OF THE GREASE TRAP.
TANK TAPERS TOP TO BOTTOM AND IS TRAPEZOIDAL IN CROSS SECTION.
TANK IS 5000 PSI CONCRETE-STEEL REINFORCED (@ 28 DAYS) CONCRETE CONFORMS TO ACI 318-16-4.5.1 AND 318-16-4.5.2, ASTM A615 AND A185.
-DIMENSION: 151" INTERIOR/ 163" EXTERIOR LENGTH x 72" INTERIOR/ 84" EXTERIOR WIDTH

NOTES:
1) WHEN LOCATED IN DRIVEWAYS OR PAVED AREAS, GREASE TRAP TO BE DESIGNED FOR APPROPRIATE LOAD BEARING CONDITIONS. GREASE TRAP SHALL BE CAPABLE OF WITHSTANDING HS-20 LOADING.
2) ALL PIPE PENETRATIONS SHALL BE WATERTIGHT.
3) GREASE TRAP SHALL BE PROVIDED WITH GAS-TIGHT MANHOLE COVERS, IN ACCORDANCE WITH TOWNSHIP STANDARD SPECIFICATIONS.
4) PRECAST CONCRETE SHALL HAVE A MINIMUM 28-DAY COMPRESSIVE STRENGTH 5000 PSI.
5) EXTERIOR CONCRETE SURFACES BELOW GRADE SHALL HAVE 2 COATS OF COAL TAR EPOXY.
6) SPECIFIC SEALANT DETAIL AT CONCRETE RISER TO CONCRETE VAULT INTERFACE SHALL BE WATERTIGHT. AT A MINIMUM, THE JOINT SHALL BE SEALED WITH BUTYL RUBBER SEALANT (KENT SEAL #2 OR APPROVED EQUIVALENT) AND THE EXTERIOR OF THE JOINT SHALL BE SEALED WITH NON-SHRINK GROUT IN CONFORMANCE WITH THE TOWNSHIP STANDARD GREASE TRAP DETAIL.
7) TANK SHALL BE TESTED FOR WATER TIGHTNESS BY FILLING FOR 24 HRS. TO SOAK, THEN TOPPED OFF, AND THEN WATCHED FOR 24 HRS. NO DROP IN WATER IS ALLOWED.
8) CAST IRON SHALL BE BOLTED TO CONCRETE WITH MASTIC TAPE (KENT SEAL OR APPROVED EQUIVALENT) SEALANT.
9) MAXIMUM EARTH COVER=5.0', HS-20 LOADING.
10) INLET AND OUTLET EQUIPPED WITH PIPE SEALS.

GREASE TRAP
1500 GALLON (2 COMPARTMENT) TANK
NOT TO SCALE

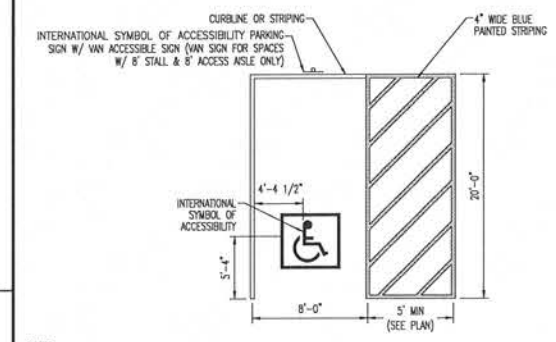

NOTES:
1. ADA PARKING STALL AND ACCESS AISLE SLOPE TO BE 1.5% MAX FOR NEW CONSTRUCTION.
2. PAVEMENT STRIPING FOR ALL ADA PARKING SPACES SHALL BE PAINTED AZURE BLUE.
3. WHERE AN ADA PARKING STALL MEETS A STANDARD PARKING STALL, AN AZURE BLUE AND WHITE PAVEMENT STRIPE SHALL BE PAINTED.
4. ALL PAVEMENT STRIPING, MARKINGS AND SIGNAGE SHALL BE CONSTRUCTED IN ACCORDANCE WITH THE LATEST ADA ACCESSIBILITY GUIDELINES.

INTERNATIONAL SYMBOL OF ACCESSIBILITY STALL MARKINGS (TWP STANDARD)
NOT TO SCALE

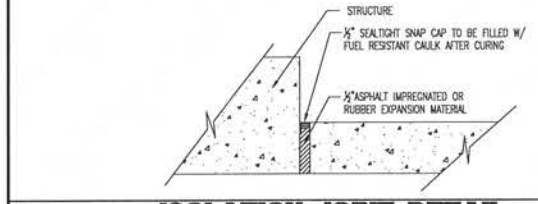

ISOLATION JOINT DETAIL
AT STRUCTURES SUCH AS GAS ISLANDS, BUILDING CANOPY COLUMNS, ETC.
SEE ARCH. SPEC. FOR COMPLETE CONCRETE DETAILS

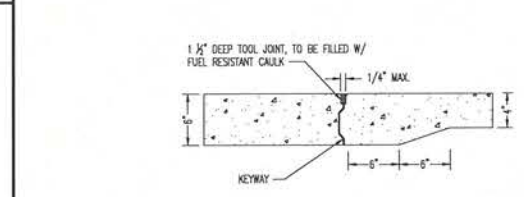

CONSTRUCTION JOINT DETAIL
SEE ARCH. SPEC. FOR COMPLETE CONCRETE DETAILS

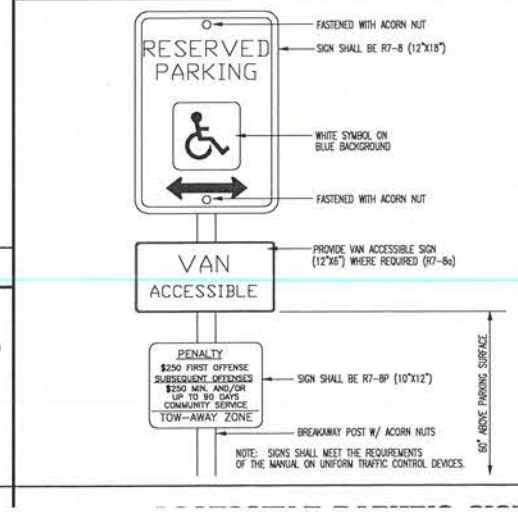

MUNICIPAL, COUNTY, STATE AND NJA DETAILS TO SUPERCEDE DYNAMIC ENGINEERING DETAILS WHERE APPLICABLE

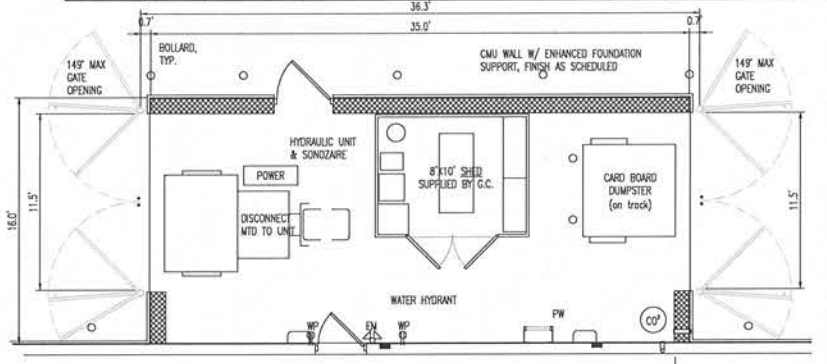

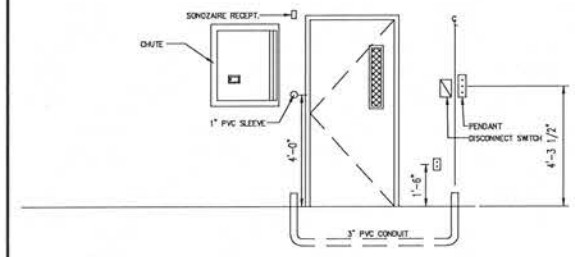

7 TRASH COMPOUND AT STAGING AREA EXT. DETAILS

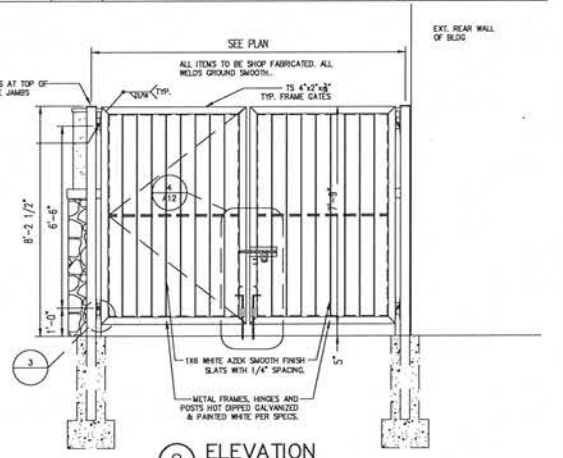

2 ELEVATION

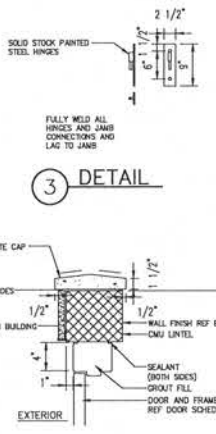

3 DETAIL

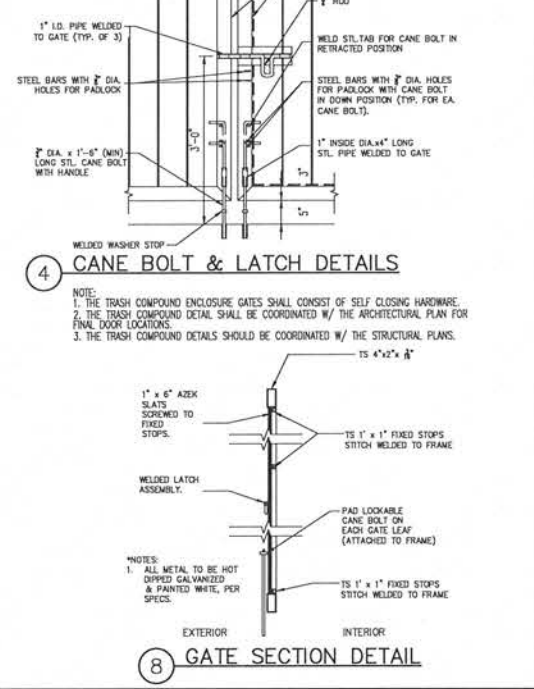

4 CANE BOLT & LATCH DETAILS

5 SECTION

6 LINTEL DETAIL

8 GATE SECTION DETAIL

WAWA CMU TRASH ENCLOSURE
NOT TO SCALE

PROTECT YOURSELF
ALL STATES REQUIRE NOTIFICATION OF EXCAVATORS, DESIGNERS, OR ANY PERSON PREPARING TO DISTURB THE EARTH'S SURFACE ANYWHERE IN ANY STATE.
811
Know what's Below
Call before you dig.

THIS PLAN SET IS FOR PERMITTING PURPOSES ONLY AND MAY NOT BE USED FOR CONSTRUCTION

Date	Comments	By
08/03/20	REV. PER TOWNSHIP ENGINEER & SEWER COMMENTS	RND

DYNAMIC ENGINEERING
LAND DEVELOPMENT CONSULTING • PERMITTING • GEOTECHNICAL • ENVIRONMENTAL • SURVEY • PLANNING & ZONING
1904 Main Street
Lake Como, NJ 07719
T: 732.974.0198
F: 732.974.3521
www.dynamicec.com
Additional offices conveniently located at:
Chester, New Jersey T: 908.879.9229 | Toms River, New Jersey T: 732.974.0198 | Newtown, Pennsylvania T: 267.685.0276
Allen, Texas T: 972.534.2100 | Austin, Texas T:512.646.2646 | Houston, Texas T: 281.789.6400
Delray Beach, Florida T: 561.921.8570

TITLE: WAWA CONSTRUCTION DETAILS

PROJECT: VOORHEES ROUTE 73 DEVELOPMENT GROUP, LLC
PROPOSED WAWA FOOD MARKET & FUELING STATION
BLOCK 36, LOT 11 & BLOCK 220, LOTS 9 & 16
NJSH ROUTE 73 AND KRESSON ROAD (CR 671)
TOWNSHIP OF EVESHAM (BURLINGTON COUNTY) & TOWNSHIP OF VOORHEES (CAMDEN COUNTY) NEW JERSEY

JOB No:	0744-12-010
DATE:	12/10/19
DRAWN BY:	KTK
SCALE: (H) NOT TO (V) SCALE	
DESIGNED BY:	MS
CHECKED BY:	MAW
SHEET No:	31 OF 35

MATTHEW SHARO — PROFESSIONAL ENGINEER
MARK A. WHITAKER — PROFESSIONAL ENGINEER
CONSTRUCTION CHECK — DATE
CONSTRUCTION CHECK — DATE

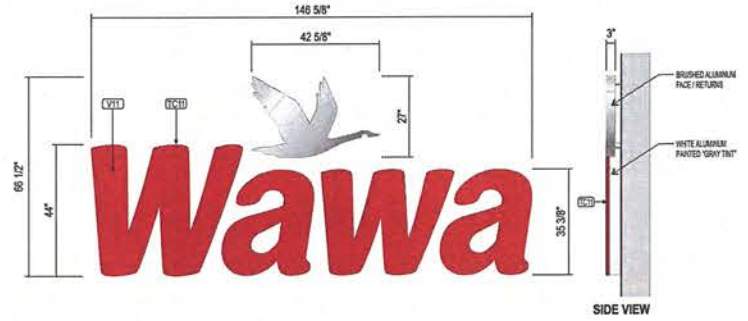

X 44" ILLUMINATED CHANNEL LETTERS w/ BRUSHED ALUM. HALO LIT GOOSE LOGO
QTY: 1
STANDARD SPECS - SEE COLOR SPECIFICATION LIBRARY

44" WAWA SIGN DETAIL
(67.7 SF)
NOT TO SCALE

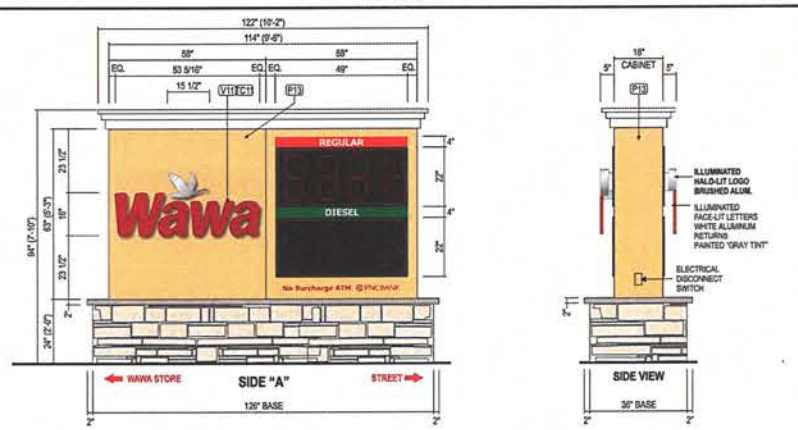

18" / 2 PRODUCT (OPTION 2A)
M-50 D/F ILLUMINATED MONUMENT SIGN (49.87 SQ. FT.)
STANDARD SPECS - SEE COLOR SPECIFICATION LIBRARY

M-50 SIGN DETAIL
(49.87 SF)
NOT TO SCALE

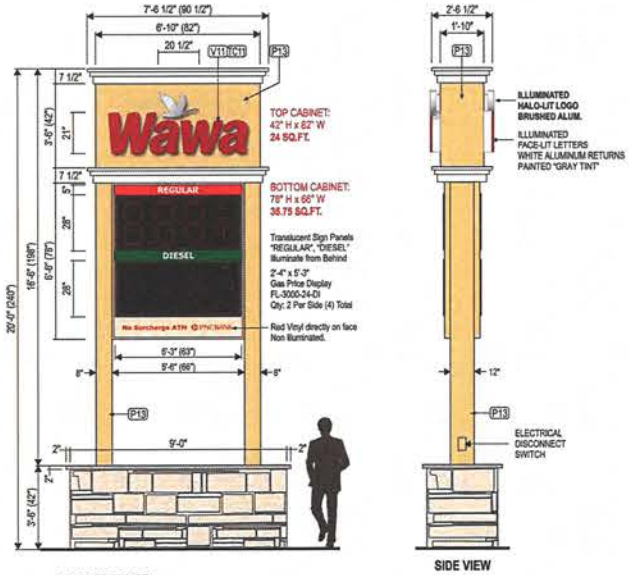

24" / 2 PRODUCT
P-50 D/F ILLUMINATED PYLON SIGN (59.75 SQ. FT.)
STANDARD SPECS - SEE COLOR SPECIFICATION LIBRARY

P-50 SIGN DETAIL
(59.75 SF)
NOT TO SCALE

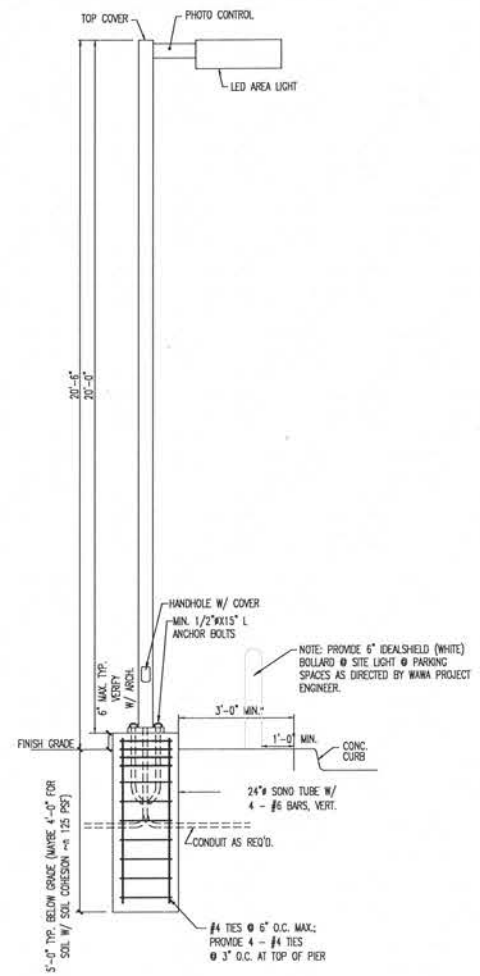

20' LIGHT POLE W/ STANDARD ANCHORING DETAIL
N.T.S.

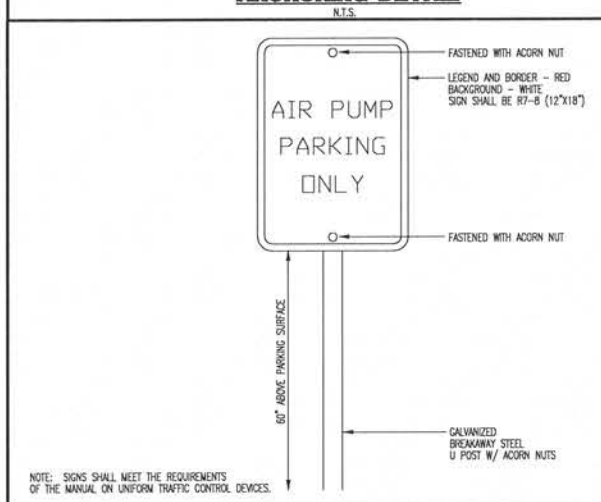

AIR PARKING SIGN
N.T.S.

18" x 12" REGULATORY

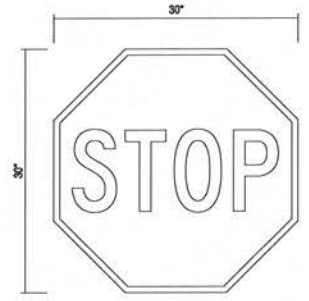

30" x 30" STOP SIGN
MUTCD SIGN R1-1

MISCELLANEOUS SIGN DETAILS
NOT TO SCALE

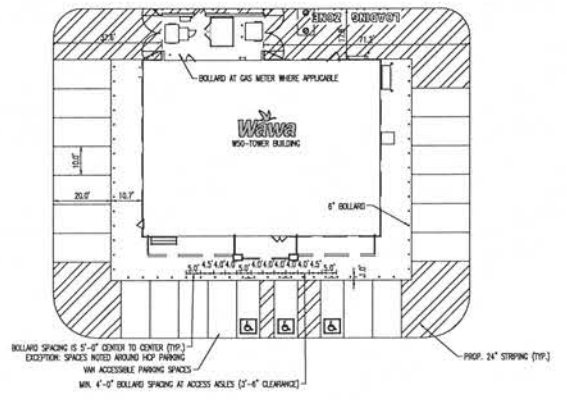

STRIPING & BOLLARD PLACEMENT DETAIL
NOT TO SCALE

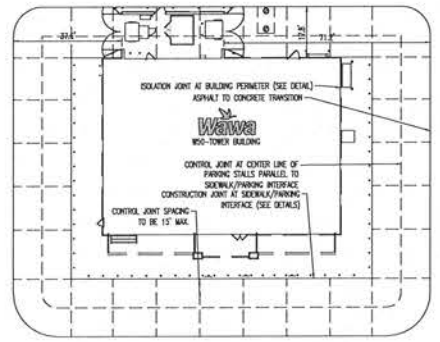

PARKING CONTROL JOINT PLAN
NOT TO SCALE

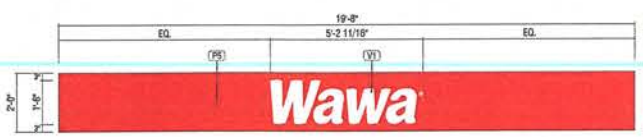

E GAS PUMP SPANNER (STACKED PUMPS)
QTY: 2
COLORS TO MATCH "WAWA" STANDARD COLORS

SPANNER SIGN DETAIL

5" Deep Front Lit LED Illuminated Letters & Logo (on 4" x 7" Extruded Raceway) - Right Side

WAWA CANOPY SIGN DETAIL

THIS PLAN SET IS FOR PERMITTING PURPOSES ONLY AND MAY NOT BE USED FOR CONSTRUCTION

Date	Comments	By
08/03/20	REV. PER TOWNSHIP ENGINEER & SEWER	RND

DYNAMIC ENGINEERING
LAND DEVELOPMENT CONSULTING • PERMITTING • GEOTECHNICAL • ENVIRONMENTAL • SURVEY • PLANNING & ZONING
1904 Main Street, Lake Como, NJ 07719 | T: 732.974.0198 | F: 732.974.3521 | www.dynamicec.com
Additional offices conveniently located at: Chester, New Jersey T: 908.879.9229 | Toms River, New Jersey T: 732.974.0198 | Newtown, Pennsylvania T: 267.685.0374 | Allen, Texas T: 972.534.2100 | Austin, Texas T: 512.646.2646 | Houston, Texas T: 281.789.6400 | Delray Beach, Florida T: 561.921.6570

TITLE: WAWA CONSTRUCTION DETAILS

PROJECT: VOORHEES ROUTE 73 DEVELOPMENT GROUP, LLC
PROPOSED WAWA FOOD MARKET & FUELING STATION
BLOCK 36, LOT 11 & BLOCK 220, LOTS 9 & 16
NJSH ROUTE 73 AND KRESSON ROAD (CR 671)
TOWNSHIP OF EVESHAM (BURLINGTON COUNTY) & TOWNSHIP OF VOORHEES (CAMDEN COUNTY) NEW JERSEY

JOB No: 0744-12-010
DATE: 12/10/19
DRAWN BY: KTK
SCALE: (H) NOT TO (V) SCALE
DESIGNED BY: MS
CHECKED BY: MAW
SHEET No: 32 OF 35

MATTHEW SHARO — PROFESSIONAL ENGINEER
MARK A. WHITAKER — PROFESSIONAL ENGINEER
CONSTRUCTION CHECK — DATE
CONSTRUCTION CHECK — DATE

THIS PLAN TO BE UTILIZED FOR VEHICLE CIRCULATION PURPOSES ONLY

C1 ZONE

OFFICE USE

C-1 ZONE

BURLINGTON COUNTY
TOWNSHIP OF
EVESHAM

CAMDEN COUNTY
TOWNSHIP OF
VOORHEES

1 STORY BUSINESS

UP C21858

CAPPED REBAR FOUND

UP C8000

S 0°48'30" W
5.72'

375' ASHTO SIGHT TRIANGLE

15' PERIMETER BUFFER (EVESHAM)

S 88°51'54" E
331.75'

50' SIDE YARD SETBACK (EVESHAM)

100' FRONT YARD SETBACK (EVESHAM)

25' COMMERCIAL BUFFER (VOORHEES)

50' SIDE YARD SETBACK (VOORHEES)

R=5815.72'
L=323.10'
Δ=3° 10' 59"
CHB=S 0° 47' 00" E
CHD=323.06'

NJ STATE HIGHWAY ROUTE 73
(WAS ASHTO LIMIT - MARLTON ROAD)
(126 FEET WIDE - AS PER DEED)

SIGN 'RIGHT LANE MUST TURN RIGHT'
TO BE RELOCATED

UP C16011
TO BE RELOCATED

PROPOSED
Wawa
W50T
5,051 SF
(54 SPACES)

80.7'

61.4'

10' REAR YARD SETBACK (VOORHEES)

50' SIDE YARD SETBACK (VOORHEES)

40' RESIDENTIAL BUFFER (EVESHAM)

PROP. RELOCATED UTILITY POLE

CAPPED REBAR FOUND

50' RESIDENTIAL BUFFER (VOORHEES)

S 87°37'30" W
214.93'

1 STORY WOOD SIDED RANCHER

CAPPED REBAR

RESIDENTIAL USE

CONCRETE MONUMENT FOUND

DEL 'E' INLET

GAS BARRIER

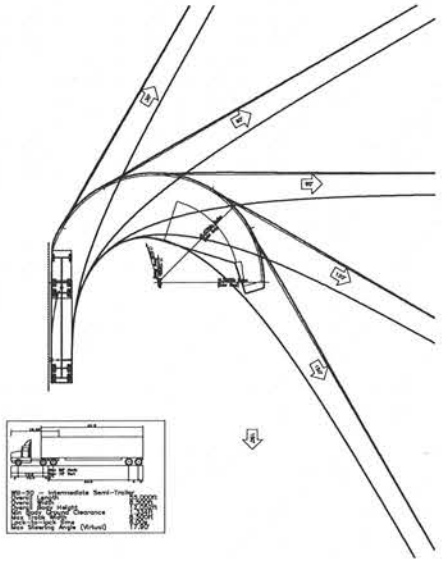

VEHICLE LEGEND:

CHASSIS ENVELOPE

VEHICLE BODY ENVELOPE

GRAPHIC SCALE

-20 0 10 20 40 80

(IN FEET)
1 INCH = 20 FT.

THIS PLAN SET IS FOR PERMITTING PURPOSES ONLY AND MAY NOT BE USED FOR CONSTRUCTION

Date	Comments	By
08/03/20	REV. PER TOWNSHIP ENGINEER & SEWER COMMENTS	RND

DYNAMIC ENGINEERING
LAND DEVELOPMENT CONSULTING • PERMITTING • GEOTECHNICAL • ENVIRONMENTAL • SURVEY • PLANNING & ZONING
1904 Main Street
Lake Como, NJ 07719
T: 732.974.0198
F: 732.974.3521
www.dynamicec.com
Additional offices conveniently located at:
Chester, New Jersey T: 908.879.9229 | Toms River, New Jersey T: 732.974.0198 | Newtown, Pennsylvania T: 267.685.0276
Allen, Texas T: 972.534.2100 | Austin, Texas T: 512.646.2646 | Houston, Texas T: 281.799.6400
Delray Beach, Florida T: 561.921.8570

TITLE: VEHICLE CIRCULATION PLAN – WB-50

PROJECT: **VOORHEES ROUTE 73 DEVELOPMENT GROUP, LLC**
PROPOSED WAWA FOOD MARKET & FUELING STATION
BLOCK 36, LOT 11 & BLOCK 220, LOTS 9 & 16
NJSH ROUTE 73 AND KRESSON ROAD (CR 671)
TOWNSHIP OF EVESHAM (BURLINGTON COUNTY) & TOWNSHIP OF VOORHEES (CAMDEN COUNTY) NEW JERSEY

JOB No:	0744-12-010
DATE:	12/10/19
DRAWN BY:	KTK
SCALE: (H) 1"=20' (V)	
DESIGNED BY:	MS
CHECKED BY:	MAW
SHEET No:	33 OF 35

MATTHEW SHARO
PROFESSIONAL ENGINEER
CONSTRUCTION CHECK _____ DATE _____

MARK A. WHITAKER
PROFESSIONAL ENGINEER
CONSTRUCTION CHECK _____ DATE _____

YOURSELF
CIATORS, DESIGNERS, OR ANY PERSON
'S SURFACE ANYWHERE IN ANY STATE.
11
below

THIS PLAN TO BE UTILIZED FOR VEHICLE CIRCULATION PURPOSES ONLY

C-1 ZONE

BURLINGTON COUNTY
TOWNSHIP OF EVESHAM

CAMDEN COUNTY
TOWNSHIP OF VOORHEES

USE

1 STORY BUSINESS

UP C21856

CAPPED REBAR FOUND

575' MSHTO SIGHT TRIANGLE

15' PERIMETER BUFFER (EVESHAM)

S 88°51'54" E
331.75'

50' SIDE YARD SETBACK (EVESHAM)

100' FRONT YARD SETBACK (EVESHAM)

25' COMMERCIAL BUFFER (VOORHEES)

50' SIDE YARD SETBACK (VOORHEES)

R=5815.72'
L=323.10'
Δ=3° 10' 59"
CHB=S 0° 47' 00" E
CHD=323.06'

SIGN TO BE RELOCATED

NJ STATE HIGHWAY ROUTE 73
(AKA MARLTON PIKE)
(SPEED LIMIT - MARLTON ROAD)
(120 FEET WIDE - 45 PER SIDE)

SIGN "RIGHT LANE MUST TURN RIGHT" TO BE RELOCATED

48" CREST TO BE RELOCATED

PROPOSED
Wawa
W50T
5,051 SF
(54 SPACES)

LOADING ZONE

82.7'

61.4'

100' REAR YARD SETBACK (VOORHEES)

50' SIDE YARD SETBACK (EVESHAM)

40' RESIDENTIAL BUFFER (EVESHAM)

PROP. RELOCATED UTILITY POLE

CAPPED REBAR FOUND

50' SIDE YARD SETBACK (VOORHEES)

50' RESIDENTIAL BUFFER (VOORHEES)

GAS MARKER

S 87°37'30" W
214.93'

1 STORY WOOD SHED FRAMER

CAPPED REBAR

RESIDENTIAL USE

S 5°21'52" E
130.93'

100' REAR YARD SETBACK (VOORHEES)

50' RESIDENTIAL BUFFER

MOTS SLOW

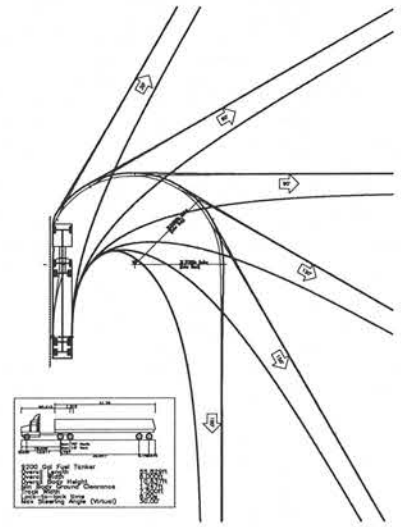

VEHICLE LEGEND:

CHASSIS ENVELOPE

VEHICLE BODY ENVELOPE

GRAPHIC SCALE

-20 0 10 20 40 80

(IN FEET)
1 INCH = 20 FT.

THIS PLAN SET IS FOR PERMITTING PURPOSES ONLY AND MAY NOT BE USED FOR CONSTRUCTION

DYNAMIC ENGINEERING
LAND DEVELOPMENT CONSULTING • PERMITTING • GEOTECHNICAL • ENVIRONMENTAL • SURVEY • PLANNING & ZONING
1904 Main Street
Lake Como, NJ 07719
T: 732.974.0198
F: 732.974.3521
www.dynamicec.com
Additional offices conveniently located at:
Chester, New Jersey T: 908.879.9229 | Toms River, New Jersey T: 732.974.0198 | Newtown, Pennsylvania T: 267.685.0276
Allen, Texas T: 972.534.2100 | Austin, Texas T: 512.646.2646 | Houston, Texas T: 281.789.6400
Delray Beach, Florida T: 561.921.5570

TITLE:
VEHICLE CIRCULATION PLAN – FUEL TANKER

PROJECT: **VOORHEES ROUTE 73 DEVELOPMENT GROUP, LLC**
PROPOSED WAWA FOOD MARKET & FUELING STATION
BLOCK 36, LOT 11 & BLOCK 220, LOTS 9 & 16
NJSH ROUTE 73 AND KRESSON ROAD (CR 671)
TOWNSHIP OF EVESHAM (BURLINGTON COUNTY) & TOWNSHIP OF VOORHEES (CAMDEN COUNTY) NEW JERSEY

JOB No:	0744-12-010
DATE:	12/10/19
DRAWN BY:	KTK
SCALE: (H) 1"=20' (V)	
DESIGNED BY:	MS
CHECKED BY:	MAW
SHEET No:	34 OF 35

No.	Date	Comments	By
	08/03/20	REV. PER TOWNSHIP ENGINEER & SEWER	RND

MATTHEW SHARO
PROFESSIONAL ENGINEER

MARK A. WHITAKER
PROFESSIONAL ENGINEER

CONSTRUCTION CHECK — DATE

CONSTRUCTION CHECK — DATE

(CAPPED) REBAR FOUND

YOURSELF

(CREATORS, DESIGNERS, OR ANY PERSON
S SURFACE ANYWHERE IN ANY STATE

11

below

THIS PLAN TO BE UTILIZED FOR VEHICLE CIRCULATION PURPOSES ONLY

BURLINGTON COUNTY
TOWNSHIP OF EVESHAM
CAMDEN COUNTY
TOWNSHIP OF VOORHEES

OFFICE USE
C1 ZONE
MB ZONE
RR ZONE
RESIDENTIAL USE
RELIGIOUS USE
COMMERCIAL USE
UNDEVELOPED

P.O.B.
S 0°48'30" W 5.72'
BLOCK 36, LOT 11
N/F VR-W/J&J VOORHEES II, LLC
(CURRENT OWNER AS PER REALQUEST SEARCH DB 9729, PG 1290)
GNZ, LLC (NOT CURRENT OWNER AS PER TITLE REPORT DB 6255 PG 109 & DB 7563, PG 634)

NJ STATE HIGHWAY ROUTE 73
(AKA MILLFORD - MARLTON ROAD)
(VARIABLE WIDTH - AS PER DEED)
(SPEED LIMIT - 55 MPH)

R=5815.72'
L=323.10'
Δ=3° 10' 59"
CHB=S 0° 47' 00" E
CHD=323.06'

BENCHMARK #7
ELEV=97.45
HUB & TACK SET

S 88°51'54" E 331.75'
S 80°14'19" E 92.40'
N 0°38'54" E 398.33'
S 87°37'30" E 214.93'
S 5°21'52" E 130.93'
N 56°09'14" W 73.00'
N 33°24'16" E 192.66'
N 56°57'14" W 62.01'
N 56°09'14" W 25.28'
S 56°54'49" E 374.94'
N 56°54'49" W 384.47'
S 00°40'54" W 177.77'
S 33°24'16" W 198.69'
N 34°00'45" E 94.22'
S 34°00'45" W 166.69'
N 55°59'12" W 28.00'
S 56°35'01" E 47.00'
S 67°02'24" W 17.46'
N 56°09'14" W 82.60'

PROPOSED Wawa
W50T
5,051 SF
(54 SPACES)

15' PERIMETER BUFFER (EVESHAM)
25' COMMERCIAL BUFFER (VOORHEES)
30' SIDE YARD SETBACK (EVESHAM)
50' SIDE YARD SETBACK (VOORHEES)
40' RESIDENTIAL BUFFER (EVESHAM)
50' RESIDENTIAL BUFFER (VOORHEES)
100' REAR YARD SETBACK (VOORHEES)
50' REAR YARD SETBACK (EVESHAM)
50' SIDE YARD SETBACK (VOORHEES)
25' AASHTO SIGHT TRIANGLE

UP C21658
UP C8000
UP C4132 TO BE RELOCATED
UP C10311 TO BE RELOCATED
PROP. RELOCATED UTILITY POLE
UP C28912
UP C10309
UP C11195
UP 86223
UP C10308
UP SUPPORT
UP C28442
UP C102321
UP 128

CAPPED REBAR FOUND 'FLOYD' (DH LINE)
CAPPED REBAR FOUND 'DESIGN'
CAPPED REBAR FOUND (SMASHED)
CAPPED REBAR FOUND
CONC. MONUMENT FOUND 'EVERS' (HELD)
CONC. MONUMENT FOUND
CONCRETE MONUMENT FOUND
REBAR

1 STORY BUSINESS
1 STORY GARAGE
2 STORY BRICK & SIDING HOME
1 STORY BARN
2 STORY HOUSE
1 STORY TD BANK BUILDING
SHED

ACCESS EASEMENT LOT 1.1, BLOCK 220 VOORHEES TOWNSHIP DEED BOOK 4448 PAGE 889

15' WIDE DRAINAGE EASEMENT LOT 9.02, BLOCK 220, VOORHEES TOWNSHIP DEED BOOK 5286, PAGE 597

ROAD NARROWS

HADDONFIELD – KRESSON ROAD
(AKA COUNTY ROUTE 671)
(AKA HADDONFIELD – MILFORD ROAD)
(AKA KRESSON ROAD)
(AKA HADDONFIELD ROAD)
(VARIABLE WIDTH - AS PER DEED)
(SPEED LIMIT - 45 MPH)

365' VEGETATIVE SWALE THEREAFTER
CAPPED REBAR W/CONC. BASE
CONC. MONUMENT FOUND
ROUTE OF WAY DEDICATION DEED BOOK 4880 PAGE 409

KRESSON-GIBBSBORO ROAD
(VARIABLE WIDTH - AS PER DEED)

R.O.W. LINE

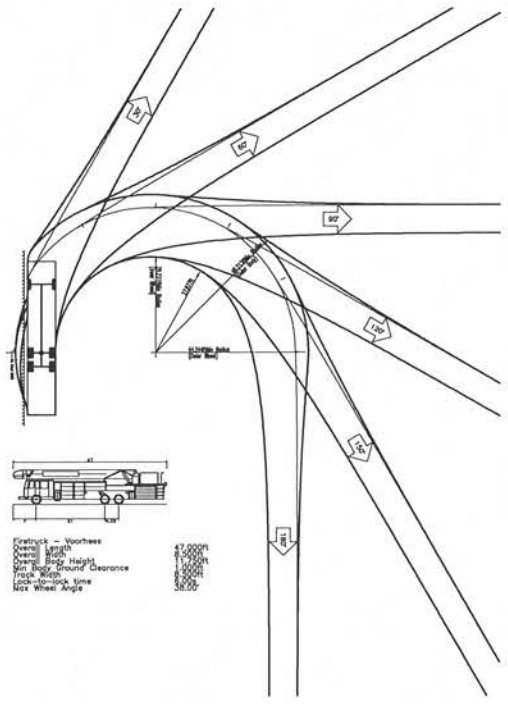

VEHICLE LEGEND:

CHASSIS ENVELOPE

VEHICLE BODY ENVELOPE

GRAPHIC SCALE
-40 0 20 40 80 160
(IN FEET)
1 INCH = 40 FT.

THIS PLAN SET IS FOR PERMITTING PURPOSES ONLY AND MAY NOT BE USED FOR CONSTRUCTION

By	Date	Comments
RNO	08/03/20	REV. PER TOWNSHIP ENGINEER & SEWER COMMENTS

DYNAMIC ENGINEERING
LAND DEVELOPMENT CONSULTING • PERMITTING • GEOTECHNICAL • ENVIRONMENTAL • SURVEY • PLANNING & ZONING
1904 Main Street
Lake Como, NJ 07719
T: 732.974.0198
F: 732.974.3521
www.dynamicec.com
Additional offices conveniently located at:
Chester, New Jersey T: 908.879.9229 | Toms River, New Jersey T: 732.974.0198 | Newtown, Pennsylvania T: 267.685.2076
Allen, Texas T: 972.534.2100 | Austin, Texas T:512.646.2646 | Houston, Texas T: 281.789.6400
Delray Beach, Florida T: 561.921.8570

TITLE: VEHICLE CIRCULATION PLAN – FIRE TRUCK

PROJECT: **VOORHEES ROUTE 73 DEVELOPMENT GROUP, LLC**
PROPOSED WAWA FOOD MARKET & FUELING STATION
BLOCK 36, LOT 11 & BLOCK 220, LOTS 9 & 16
NJSH ROUTE 73 AND KRESSON ROAD (CR 671)
TOWNSHIP OF EVESHAM (BURLINGTON COUNTY) & TOWNSHIP OF VOORHEES (CAMDEN COUNTY) NEW JERSEY

JOB No: 0744-12-010
DATE: 12/10/19
DRAWN BY: KTK
SCALE: (H) 1"=40' (V)
DESIGNED BY: MS
CHECKED BY: MAW
SHEET No: 35 OF 35

MATTHEW SHARO
PROFESSIONAL ENGINEER

MARK A. WHITAKER
PROFESSIONAL ENGINEER

CONSTRUCTION CHECK _____ DATE _____
CONSTRUCTION CHECK _____ DATE _____

THIS PLAN TO BE UTILIZED FOR LIGHTING PURPOSES ONLY

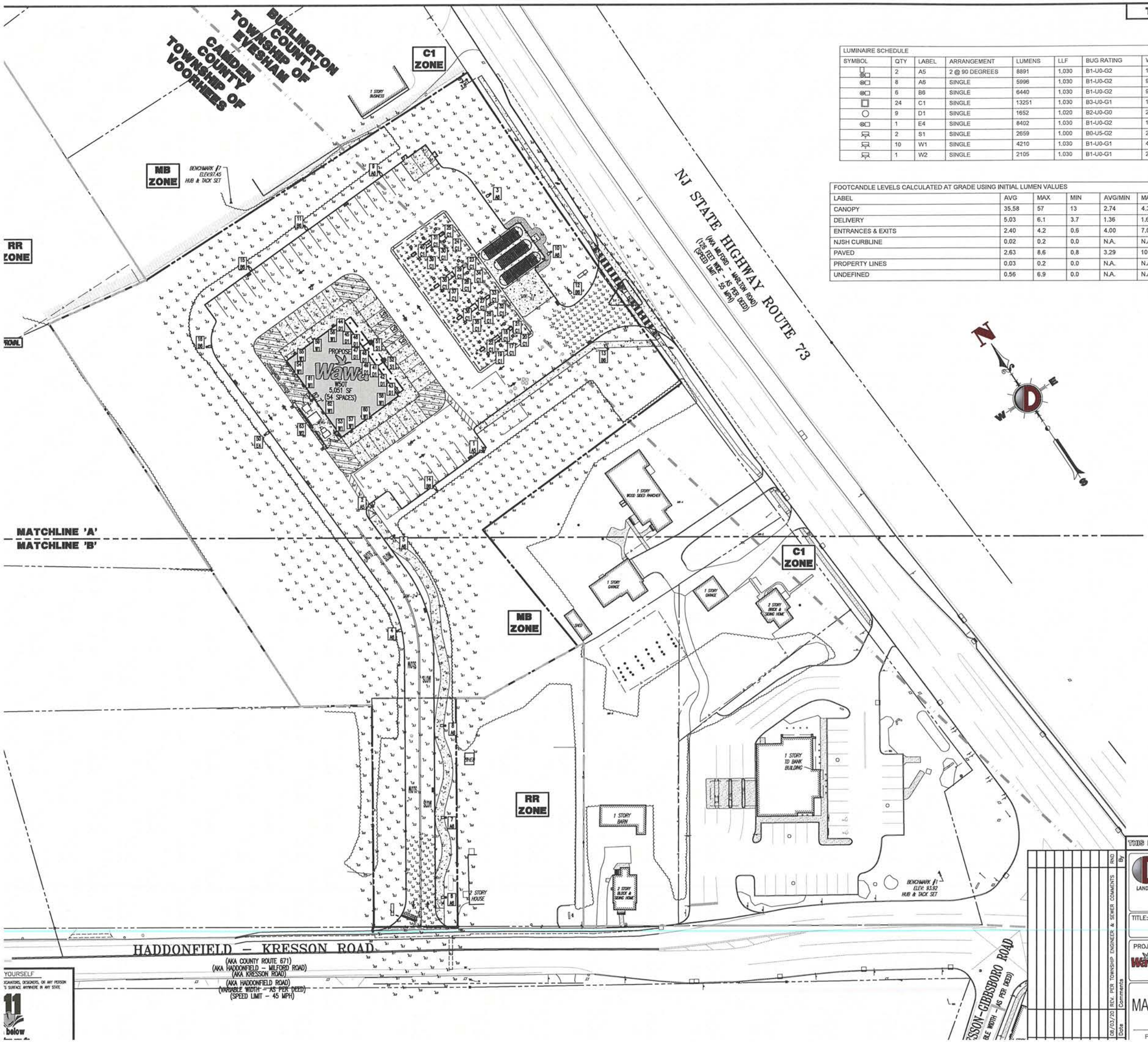

LUMINAIRE SCHEDULE									
SYMBOL	QTY	LABEL	ARRANGEMENT	LUMENS	LLF	BUG RATING	WATTS/LUMINAIRE	TOTAL WATTS	MANUFACTURER	DESCRIPTION
	2	A5	2 @ 90 DEGREES	8891	1.030	B1-U0-G2	134	536	CREE, INC.	ARE-EDG-3MB-DA-06-E-UL-WH-700-57K
	8	A6	SINGLE	5996	1.030	B1-U0-G2	93	744	CREE, INC.	ARE-EDG-3MB-DA-04-E-UL-WH-700-57K
	6	B6	SINGLE	6440	1.030	B1-U0-G2	93	558	CREE, INC.	ARE-EDG-4MB-DA-04-E-UL-WH-700-57K
	24	C1	SINGLE	13251	1.030	B3-U0-G1	134	3216	CREE, INC.	CAN-304-SL-RD-06-E-UL-WH-700-57K
	9	D1	SINGLE	1652	1.020	B2-U0-G0	27.2	244.8	Cree Inc	KR6-20L-35K-120V + KR6T-SSGC-FF
	1	E4	SINGLE	8402	1.030	B1-U0-G2	131.9	131.9	CREE, INC.	ARE-EDG-2MB-DM-06-E-UL-WH-700-57K
	2	S1	SINGLE	2659	1.000	B0-U5-G2	20	40	FC/SSL Lighting	FCWS7170-XXX-35K-2500-CRI85-XX-D
	10	W1	SINGLE	4210	1.030	B1-U0-G1	43	430	CREE, INC.	SEC-EDG-3M-WM-04-E-UL-WH-350-57K
	1	W2	SINGLE	2105	1.030	B1-U0-G1	25	25	CREE, INC.	SEC-EDG-3M-WM-02-E-UL-WH-350-57K

FOOTCANDLE LEVELS CALCULATED AT GRADE USING INITIAL LUMEN VALUES					
LABEL	AVG	MAX	MIN	AVG/MIN	MAX/MIN
CANOPY	35.58	57	13	2.74	4.38
DELIVERY	5.03	6.1	3.7	1.36	1.65
ENTRANCES & EXITS	2.40	4.2	0.6	4.00	7.00
NJSH CURBLINE	0.02	0.2	0.0	N.A.	N.A.
PAVED	2.63	8.6	0.8	3.29	10.75
PROPERTY LINES	0.03	0.2	0.0	N.A.	N.A.
UNDEFINED	0.56	6.9	0.0	N.A.	N.A.

LUMINAIRE LOCATION SUMMARY		
LUM NO.	LABEL	MTG. HT.
1	A5	17.5
2	A5	17.5
3	A6	17.5
4	A6	17.5
5	A6	17.5
6	A6	17.5
7	A6	17.5
8	A6	17.5
9	A6	17.5
10	A6	17.5
11	B6	17.5
12	B6	17.5
13	B6	17.5
14	B6	17.5
15	B6	17.5
16	B6	17.5
17	C1	19.32
18	C1	19.32
19	C1	21.53
20	C1	17.11
21	C1	17.11
22	C1	21.53
23	C1	17.11
24	C1	17.11
25	C1	17.11
26	C1	19.32
27	C1	19.32
28	C1	19.32
29	C1	19.32
30	C1	19.32
31	C1	19.32

LUMINAIRE LOCATION SUMMARY		
LUM NO.	LABEL	MTG. HT.
32	C1	17.11
33	C1	17.11
34	C1	17.11
35	C1	21.53
36	C1	21.53
37	C1	21.53
38	C1	21.53
39	C1	21.53
40	C1	21.53
41	D1	11
42	D1	11
43	D1	11
44	D1	11
45	D1	11
46	D1	11
47	D1	11
48	D1	11
49	D1	11
50	E4	17.5
51	S1	9
52	S1	9
53	W1	12
54	W1	12
55	W1	12
56	W1	12
57	W1	12
58	W1	12
59	W1	12
60	W1	12
61	W1	12
62	W1	12
63	W2	8

SEE SHEET 2 OF 3 FOR LIGHTING DETAILS

SEE SHEET 3 OF 3 FOR LIGHTING NOTES

GRAPHIC SCALE

-40 0 20 40 80 160

(IN FEET)
1 INCH = 40 FT.

THIS PLAN SET IS FOR PERMITTING PURPOSES ONLY AND MAY NOT BE USED FOR CONSTRUCTION

DYNAMIC ENGINEERING
LAND DEVELOPMENT CONSULTING • PERMITTING • GEOTECHNICAL • ENVIRONMENTAL • SURVEY • PLANNING & ZONING
1904 Main Street
Lake Como, NJ 07719
T: 732.974.0198
F: 732.974.9021
www.dynamicec.com
Additional offices conveniently located at:
Chester, New Jersey T: 908.879.9229 | Toms River, New Jersey T: 732.974.0198 | Newtown, Pennsylvania T: 267.685.0276
Allen, Texas T: 972.534.2100 | Austin, Texas T: 512.646.2644 | Houston, Texas T: 281.789.6400
Delray Beach, Florida T: 561.921.8570

TITLE: LIGHTING PLAN

PROJECT: VOORHEES ROUTE 73 DEVELOPMENT GROUP, LLC
PROPOSED WAWA FOOD MARKET & FUELING STATION
BLOCK 36, LOT 11 & BLOCK 220, LOTS 9 & 16
NJSH ROUTE 73 AND KRESSON ROAD (CR 671)
TOWNSHIP OF EVESHAM (BURLINGTON COUNTY) & TOWNSHIP OF VOORHEES (CAMDEN COUNTY) NEW JERSEY

JOB No: 0744-12-010
DATE: 12/10/19
DRAWN BY: RND
SCALE: (H) 1"=40' (V)
DESIGNED BY: MS
CHECKED BY: MAW
SHEET No: 1 OF 3

No.	Date	Comments	By
1	08/03/20	REV. PER TOWNSHIP ENGINEER & SEWER COMMENTS	RND

MATTHEW SHARO
PROFESSIONAL ENGINEER
CONSTRUCTION CHECK _____ DATE _____

MARK A. WHITAKER
PROFESSIONAL ENGINEER
CONSTRUCTION CHECK _____ DATE _____

THIS PLAN TO BE UTILIZED FOR LIGHTING PURPOSES ONLY

PRODUCT INFORMATION

:OL:	QTY:	LABEL:
	2	A5
·3MB-DA-06-E-UL-WH-700-57K		
	8	A6
·3MB-DA-04-E-UL-WH-700-57K		
	6	B6
·4MB-DA-04-E-UL-WH-700-57K		
	1	E4
·2MB-DM-06-E-UL-WH-700-57K		

CANOPY

PRODUCT INFORMATION

SYMBOL:	QTY:	LABEL:
	24	C1

CAN-304-SL-RD-06-E-UL-WH-700-57K

SOFFIT

PRODUCT INFORMATION

SYMBOL:	QTY:	LABEL:
⊙	9	D1

KR6-20L-35K-120V + KR6T-SSGC-FF

WALL MOUNTED

SYMBOL:	QTY:	LABEL:
⊡〉	2	S1

FCWS7170-XXX-35K-2500-CRI85-XX-D

WALL MOUNTED

SYMBOL:	QTY:	LABEL:
	10	W1
	1	W2

SEC-EDG-3M-WM-04-E-UL-WH-350-57K

SEC-EDG-3M-WM-02-E-UL-WH-350-57K

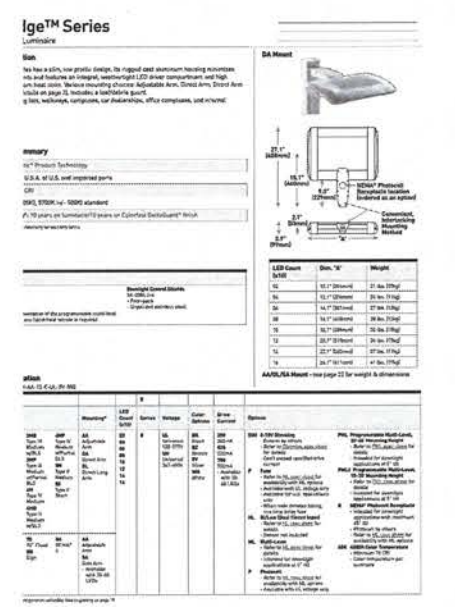

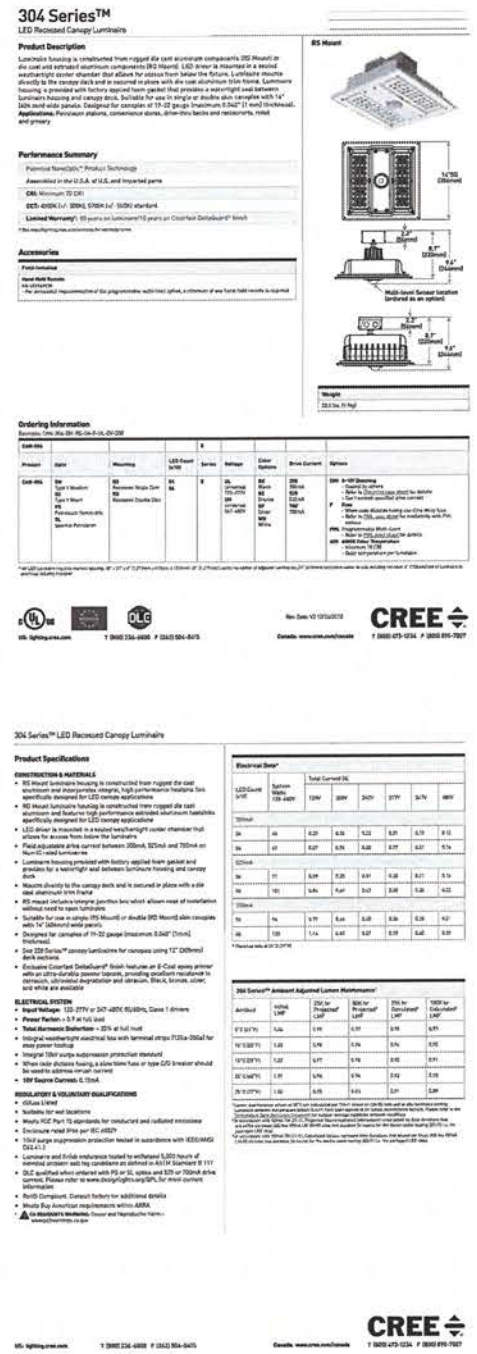

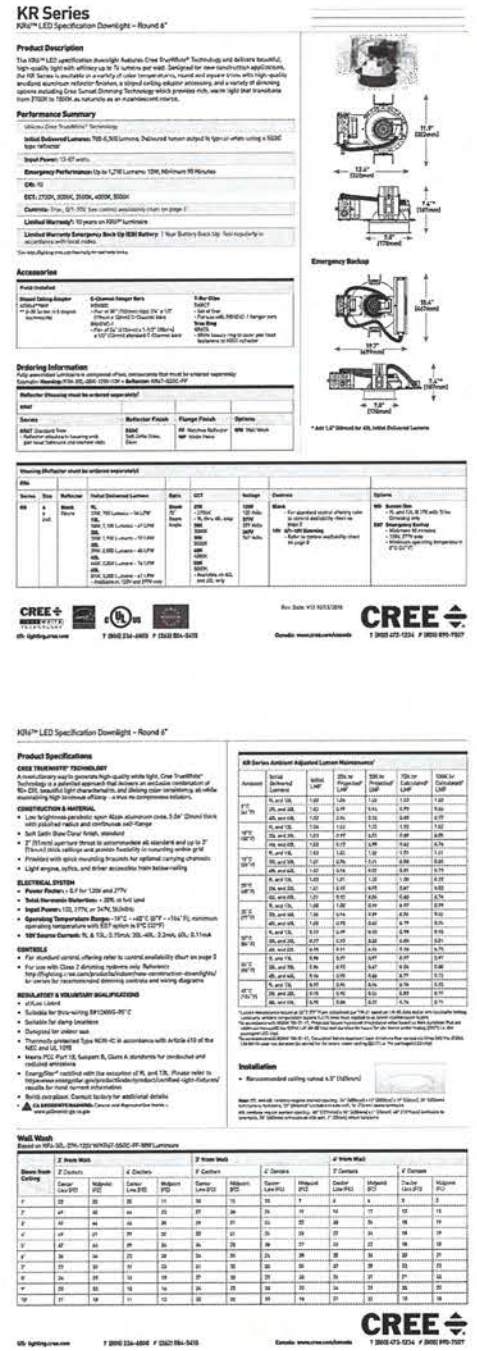

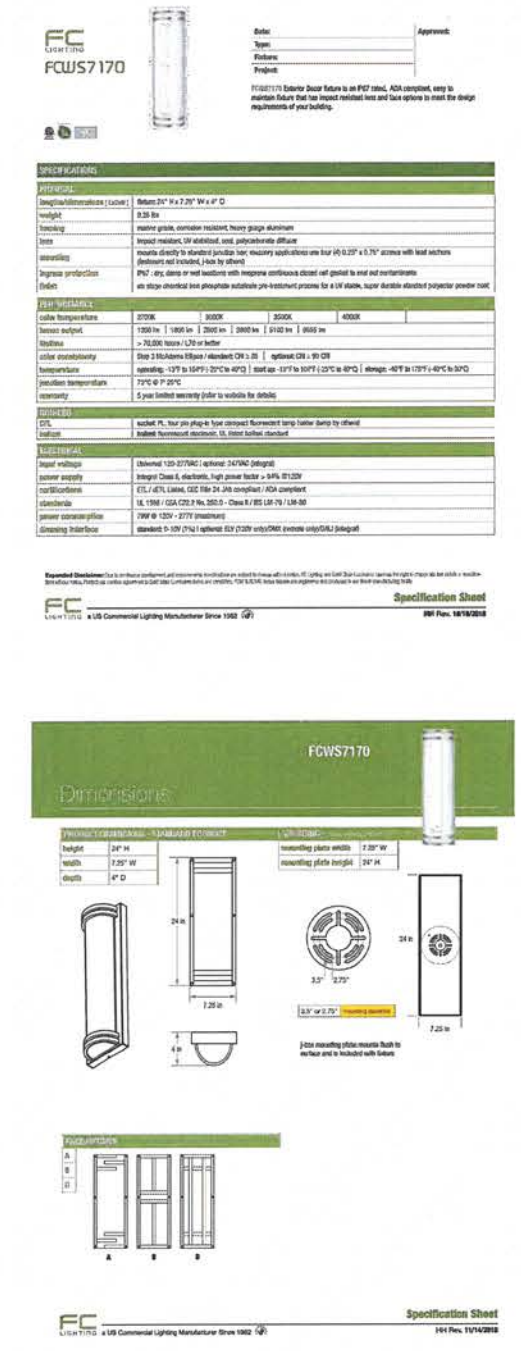

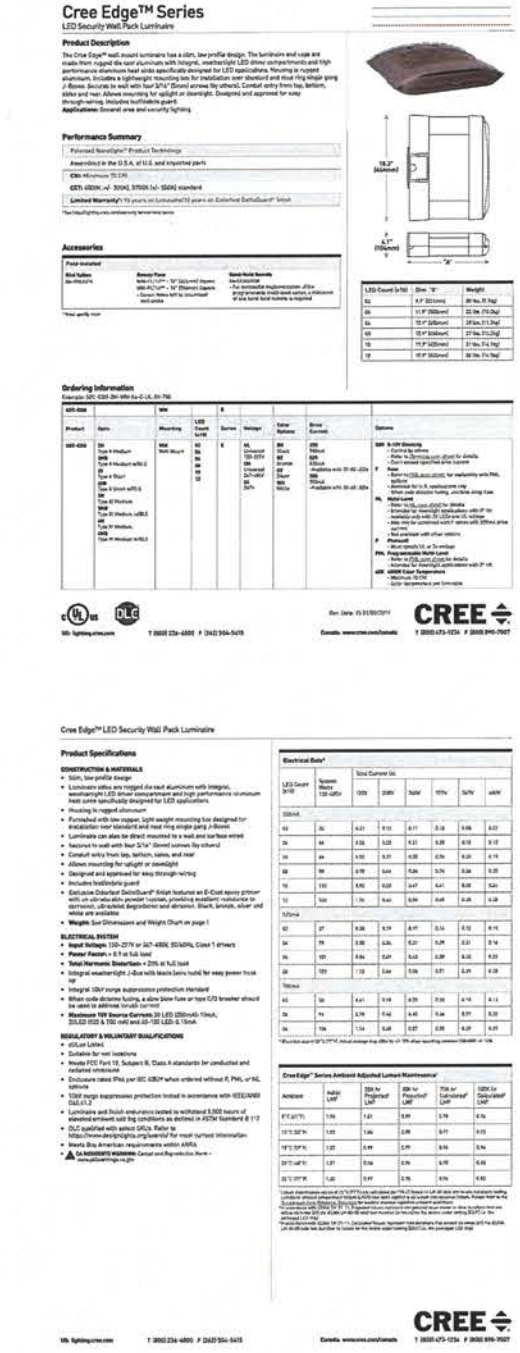

THIS PLAN SET IS FOR PERMITTING PURPOSES ONLY AND MAY NOT BE USED FOR CONSTRUCTION

YOURSELF
DESIGNATORS, DESIGNERS, OR ANY PERSON
'S SURFACE ANYWHERE IN ANY STATE
11
below

No.	Date	Comments	By
	08/03/20	REV. PER TOWNSHIP ENGINEER & SEWER	RND

DYNAMIC ENGINEERING
LAND DEVELOPMENT CONSULTING • PERMITTING • GEOTECHNICAL • ENVIRONMENTAL • SURVEY • PLANNING & ZONING
1904 Main Street
Lake Comp. NJ 07719
T: 732.974.0198
F: 732.974.3521
www.dynamicec.com
Chester, New Jersey T: 908.879.9229 | Additional offices conveniently located at:
Toms River, New Jersey T: 732.974.0198 | Newtown, Pennsylvania T: 267.685.0276
Allen, Texas T: 972.534.2100 | Austin, Texas T:512.646.2646 | Houston, Texas T: 281.789.6400
Delray Beach, Florida T: 561.921.8570

TITLE: LIGHTING DETAILS

PROJECT: VOORHEES ROUTE 73 DEVELOPMENT GROUP, LLC
PROPOSED WAWA FOOD MARKET & FUELING STATION
BLOCK 36, LOT 11 & BLOCK 220, LOTS 9 & 16
NJSH ROUTE 73 AND KRESSON ROAD (CR 671)
TOWNSHIP OF EVESHAM (BURLINGTON COUNTY) & TOWNSHIP OF VOORHEES (CAMDEN COUNTY) NEW JERSEY

JOB No: 0744-12-010
DATE: 12/10/19
DRAWN BY: RND
SCALE: (H) NOT TO (V) SCALE
DESIGNED BY: MS
CHECKED BY: MAW
SHEET No: 2 OF 3

MATTHEW SHARO — PROFESSIONAL ENGINEER
MARK A. WHITAKER — PROFESSIONAL ENGINEER

CONSTRUCTION CHECK — DATE
CONSTRUCTION CHECK — DATE

THIS PLAN TO BE UTILIZED FOR LIGHTING PURPOSES ONLY

LIGHTING NOTES

ILLUSTRATES ILLUMINATION LEVELS CALCULATED FROM LABORATORY DATA TAKEN UNDER CONTROLLED CONDITIONS IN ACCORDANCE WITH
RING SOCIETY OF NORTH AMERICA (IESNA) APPROVED METHODS. ACTUAL SITE ILLUMINATION LEVELS AND PERFORMANCE OF LUMINARES MAY VARY
V WEATHER, ELECTRICAL VOLTAGE, TOLERANCE IN LAMPS, AND OTHER RELATED VARIABLE FIELD CONDITIONS.

ONS LIGHTING LEVELS ARE REPRESENTATIVE OF AN APPROXIMATION UTILIZING LABORATORY DATA FOR SIMILAR FIXTURES AND/OR ACTUAL FIELD
V WITH A LIGHT METER. DUE TO FACTORS SUCH AS FIXTURE MAINTENANCE, EQUIPMENT TOLERANCES, WEATHER CONDITIONS, ETC., ACTUAL LIGHTING
AND THE LIGHTING LEVELS DEPICTED ON THIS PLAN SHOULD BE CONSIDERED AS APPROXIMATE.

NSTALLED A MINIMUM OF 2 FEET BEHIND GUIDERAIL POSTS.

AND EQUIPMENT CONSTRUCTION SHALL CONFORM TO THE CURRENT NATIONAL ELECTRICAL CODE.

RAL PLANS FOR LIGHTING DIAGRAM.

AREAS AND WALKWAYS THERETO AND APPURTENANT PASSAGEWAYS AND DRIVEWAYS SERVING COMMERCIAL, PUBLIC, OFFICE, MULTIPLE-FAMILY, RECREATIONAL OR OTHER USES HAVING COMMON OFF-STREET PARKING AND/OR LOADING AREAS SHALL BE ADEQUATELY ILLUMINATED FOR SECURITY AND SAFETY PURPOSES. THE LIGHTING PLAN IN AND AROUND THE PARKING
PROVIDE FOR NONGLARE LIGHTS FOCUSED DOWNWARD. THE LIGHT INTENSITY PROVIDED AT GROUND LEVEL SHALL BE INDICATED IN FOOTCANDLES ON THE SUBMITTED SITE PLANS AND SHALL AVERAGE AT LEAST 0.5 FOOTCANDLE AT INTERSECTIONS. LIGHTING SHALL BE PROVIDED BY FIXTURES WITH A MOUNTING HEIGHT NOT MORE THAN 25 FEET OR THE HEIGHT OF
WHICHEVER IS LESS, MEASURED FROM THE GROUND LEVEL TO THE CENTER LINE OF THE LIGHT SOURCE. (§62-55.B) **(COMPLIES)**
UTDOOR LIGHTING, SUCH AS BUILDING AND SIDEWALK ILLUMINATION, DRIVEWAYS WITH NO ADJACENT PARKING, THE LIGHTING OF SIGNS AND ORNAMENTAL LIGHTING, SHALL BE SHOWN ON THE LIGHTING PLAN IN SUFFICIENT DETAIL TO ALLOW A DETERMINATION OF THE EFFECTS UPON ADJACENT PROPERTIES, TRAFFIC SAFETY AND OVERHEAD SKY GLOW. THE OBJECTIVES
ECIFICATIONS IS TO MINIMIZE UNDESIRABLE OFF-PREMISES EFFECTS. NO LIGHT SHALL SHINE INTO BUILDING WINDOWS NOR ONTO STREETS AND DRIVEWAYS SO AS TO INTERFERE WITH OR DISTRACT DRIVER VISION. TO ACHIEVE THESE REQUIREMENTS, THE INTENSITY OF SUCH LIGHT SOURCES, THE LIGHT SHIELDING AND SIMILAR CHARACTERISTICS SHALL BE SUBJECT
APPROVAL. WALL-MOUNTED FIXTURES ARE ONLY PERMITTED IF DIRECTED INTO A SITE AND NOT POSITIONED TOWARDS NEIGHBORING PROPERTIES OR PUBLIC STREETS. (§62-55.C) **(COMPLIES)**
OUDELINES FOR PARKING AND PEDESTRIAN AREAS (§62-55-EXHIBIT A)

	ILLUMINATION OBJECTIVE		
CTIVITY	VEHICULAR TRAFFIC (FOOTCANDLES)	PEDESTRIAN SAFETY (FOOTCANDLES)	PEDESTRIAN SECURITY (FOOTCANDLES)
LUMINATION (OPENING PARKING			
TY	0.5	0.2	0.8
TMITY	1 (COMPLIES)	0.6 (COMPLIES)	2 (COMPLIES)
ITY	2	0.9	4

	AVERAGE LEVELS FOR SPECIAL PEDESTRIAN SECURITY		
AND BIKEWAY CLASSIFICATION	MINIMUM AVERAGE LEVEL (FOOTCANDLES)	MOUNTING HEIGHTS 3 TO 5 METERS (9 TO 15 FEET) (FOOTCANDLES)	MOUNTING HEIGHTS 5 TO 10 METERS (15 TO 30 FEET) (FOOTCANDLES)
(ROAD-SIDE) AND TYPE A			
L AREAS	0.9 (COMPLIES)	2	4.0 (COMPLIES)
TE AREAS	0.6	1	2
L AREAS	0.2	0.4	0.8
DISTANT FROM ROADWAYS AND EWAYS, PARK WALKWAYS AND	0.5	0.6	1
4 TUNNELS	4	5	---
4 OVERPASSES	0.3	0.4	---
4 STAIRWAYS	0.6	0.8	---

HANDBOOK DEFINITIONS:
SIFICATION:
L. THAT PORTION OF A MUNICIPALITY IN A BUSINESS DEVELOPMENT WHERE ORDINARILY THERE ARE LARGE NUMBERS OF PEDESTRIANS DURING BUSINESS HOURS.
TE. THAT PORTION OF THE MUNICIPALITY OFTEN CHARACTERIZED BY A MODERATELY HEAVY NIGHTTIME PEDESTRIAN ACTIVITY SUCH AS IN BLOCKS HAVING LIBRARIES, COMMUNITY RECREATION CENTERS, LARGE APARTMENT BUILDINGS OR NEIGHBORHOOD RETAIL STORES.
L. A RESIDENTIAL DEVELOPMENT, OR A MIXTURE OF RESIDENTIAL AND COMMERCIAL ESTABLISHMENTS, CHARACTERIZED BY A FEW PEDESTRIANS AT NIGHT. THIS DEFINITION INCLUDES AREAS WITH SINGLE-FAMILY HOMES, TOWNHOUSES AND/OR SMALL APARTMENT BUILDINGS.
VEL:
MAJOR LEAGUE ATHLETIC EVENTS, MAJOR CULTURAL OR CIVIC EVENTS, AND MAJOR REGIONAL SHOPPING CENTERS.
TY, FAST-FOOD FACILITIES, AREA SHOPPING CENTERS, HOSPITAL PARKING AREAS, TRANSPORTATION PARKING (AIRPORTS, ETC.), CULTURAL, CIVIC OR RECREATIONAL EVENTS, AND RESIDENTIAL COMPLEX PARKING.
LOCAL MERCHANT PARKING, INDUSTRIAL EMPLOYEE PARKING, EDUCATIONAL FACILITY PARKING.
LASSIFICATION:
EWAY – A STRIP WITHIN OR ADJACENT TO A PUBLIC ROADWAY OR SHOULDER, USED FOR BICYCLE TRAVEL.
EWAY – AN IMPROVED STRIP IDENTIFIED FOR PUBLIC BICYCLE TRAVEL AND LOCATED AWAY FROM A ROADWAY OR ITS ADJACENT SIDEWALK SYSTEM.

:

TELEPHONE, TELEVISION, CABLE, OPTICAL, AND OTHER SIMILAR UTILITIES, BOTH MAIN AND SERVICE LINES SERVICING NEW DEVELOPMENTS, SHALL BE PROVIDED BY UNDERGROUND WIRING WITHIN EASEMENTS OR DEDICATED PUBLIC RIGHTS-OF-WAY, INSTALLED IN ACCORDANCE WITH THE PREVAILING STANDARDS AND PRACTICES OF THE UTILITY OR OTHER COMPANIES
CH SERVICES. (§154.007.A.1) **(COMPLIES)**
UT EXISTING EASEMENTS OR PUBLIC RIGHT-OF-WAY, WHERE OVERHEAD ELECTRIC OR TELEPHONE DISTRIBUTION SUPPLY LINES AND SERVICE CONNECTIONS HAVE HERETOFORE BEEN INSTALLED, MAY BE SUPPLIED WITH ELECTRIC AND TELEPHONE SERVICE FROM THOSE OVERHEAD LINES, BUT THE SERVICE CONNECTIONS FROM THE UTILITIES' OVERHEAD LINES SHALL
UNDERGROUND. (§154.007.A.2) **(COMPLIES)**
TING WITHIN NON-RESIDENTIAL AREAS IN THE TOWNSHIP SHALL NOT UNREASONABLY INTERFERE WITH THE USE AND ENJOYMENT OF PROPERTY WITHIN THE TOWNSHIP. THIS CODE ENCOURAGES THE TYPES AND USES OF OUTDOOR LIGHTS WHICH WILL CONSERVE ENERGY, PRESERVE THE NATURAL ENVIRONMENT, AND PREVENT GLARE, UP-LIGHTING AND
LIGHT POLLUTION, WHILE PROVIDING ADEQUATE LIGHTING FOR PRODUCTIVITY AND SECURITY. (§154.007.B.1) **(COMPLIES)**
SHALL CONFORM WITH THE ILLUMINATING ENGINEERING SOCIETY HANDBOOK, MOST RECENT EDITION, AND THE AMERICAN NATIONAL PRACTICE FOR ROADWAY LIGHTING (RP-8), APPROVED BY THE AMERICAN STANDARDS INSTITUTE, RECENT EDITION. (§154.007.B.2.A) **(COMPLIES)**
LIGHTS SHALL BE DESIGNED, LOCATED, INSTALLED AND DIRECTED TO PREVENT OBJECTIONABLE LIGHT AND GLARE ACROSS PROPERTY LINES AND ABOVE A 90 DEGREE, HORIZONTAL PLANE. LAMPS SHALL BE RECESSED IN THE LUMINARE SO AS TO PREVENT GLARE. (§154.007.B.2.B) **(COMPLIES)**
ED SOURCE OF ALL LIGHTING IS METAL HALIDE OR LED LAMPS AND FIXTURES. (§154.007.B.2.C) **(COMPLIES)**
)/OR CUTOFF OPTICS SHALL BE REQUIRED IN ALL INSTALLATIONS. (§154.007.B.2.D) **(COMPLIES)**
AND LASER LIGHTS USED FOR ADVERTISING OR ENTERTAINMENT ARE NOT PERMITTED. (§154.007.B.2.E) **(COMPLIES)**
SHALL BE SHIELDED TO PREVENT GLARE FOR DRIVERS OR PEDESTRIANS, LIGHT TRESPASS BEYOND THE PROPERTY LINE AND LIGHT ABOVE THE 90 DEGREE HORIZONTAL PLANE. (§154.007.B.2.F) **(COMPLIES)**
ILLUMINATION AT THE COMMON PROPERTY LINE WITH ADJACENT PROPERTIES SHALL NOT EXCEED 0.2 FOOTCANDLE. (§154.007.B.2.G) **(COMPLIES)**
MAINTAINED ILLUMINATION AND THE AVERAGE LEVEL-TO-MINIMUM POINT RATIO OF ILLUMINATION SHALL CONFORM WITH THE FOLLOWING: (§154.007.B.3.A) **(COMPLIES)**

ION	AVERAGE MAINTAINED ILLUMINATION (FOOT CANDLES)	AVERAGE LEVEL-TO-MINIMUM POINT RATIO
IVES COMMERCIAL	0.6	6:1
COMMERCIAL	0.6	6:1

MOUNTING HEIGHT OF EXTERIOR LIGHTING SHALL CONFORM TO THE FOLLOWING SCHEDULE: (§154.007.B.3.B)

EIGHT (FEET)	MAXIMUM FIXTURE MOUNTING HEIGHT (FEET)
	14
	20 **(COMPLIES)**
ATER	25

OFFICE AND/OR RESEARCH AND INDUSTRIAL AREAS, CIRCUITS SHALL BE ARRANGED SO THAT AT LEAST 50% OF ALL LIGHTING (ALTERNATE LUMINARES) SHALL BE TURNED OFF AFTER BUSINESS HOURS, WHEN ONLY LIGHTS NECESSARY FOR SECURITY PURPOSES SHALL BE LEFT ON. (§154.007.B.3.C) **(COMPLIES)**
MAINTAINED ILLUMINATION FOR SECURITY PURPOSES SHALL BE 0.3 FOOTCANDLES. (§154.007.B.3.D) **(COMPLIES)**
HALL BE MADE FOR "CUTOFF" ILLUMINATION OF LOADING DOCKS, ENTRANCES AND OTHER SPECIAL AREAS WHERE GREATER ILLUMINATION MAY BE REQUIRED. EACH SPECIAL AREA SHALL BE ON A SEPARATE CIRCUIT WHICH SHALL BE TURNED OFF WHEN THE AREA IS NOT IN USE. (§154.007.B.3.E) **(COMPLIES)**
PLAN SHALL BE DESIGNED BY AN EXPERIENCED EXPERT LIGHTING DESIGNER WHO SHALL CERTIFY THAT THE LIGHTING PLAN CONFORMS WITH THESE STANDARDS. THE DETAILED LIGHTING PLAN, LUMINARE MANUFACTURER'S DETAILS AND ILLUMINATION DIAGRAMS AND SPECIFICATIONS SHALL BE SUBMITTED TO THE PLANNING BOARD FOR REVIEW. (§154.007.B.3.F)

YOURSELF
IGNATORS, DESIGNERS, OR ANY PERSON
S SURFACE ANYWHERE IN ANY STATE.
11
below

THIS PLAN SET IS FOR PERMITTING PURPOSES ONLY AND MAY NOT BE USED FOR CONSTRUCTION

Date	Comments	By
08/03/20	REV. PER TOWNSHIP ENGINEER & SEWER COMMENTS	RND

DYNAMIC ENGINEERING
LAND DEVELOPMENT CONSULTING • PERMITTING • GEOTECHNICAL • ENVIRONMENTAL • SURVEY • PLANNING & ZONING
1904 Main Street
Lake Como, NJ 07719
T: 732.974.0198
F: 732.974.3521
www.dynamicec.com
Additional offices conveniently located at:
Chester, New Jersey T: 908.879.9229 | Toms River, New Jersey T: 732.974.0198 | Newtown, Pennsylvania T: 267.685.0276
Allen, Texas T: 972.534.2100 | Austin, Texas T:512.646.2646 | Houston, Texas T: 281.789.6400
Delray Beach, Florida T: 561.921.8570

TITLE: LIGHTING NOTES

PROJECT: **VOORHEES ROUTE 73 DEVELOPMENT GROUP, LLC**
PROPOSED WAWA FOOD MARKET & FUELING STATION
BLOCK 36, LOT 11 & BLOCK 220, LOTS 9 & 16
NJSH ROUTE 73 AND KRESSON ROAD (CR 671)
TOWNSHIP OF EVESHAM (BURLINGTON COUNTY) & TOWNSHIP OF VOORHEES (CAMDEN COUNTY) NEW JERSEY

JOB No: 0744-12-010
DATE: 12/10/19
DRAWN BY: KTK
SCALE: (H) NOT TO (V) SCALE
DESIGNED BY: MS
CHECKED BY: MAW
SHEET No: 3 OF 3

MATTHEW SHARO — PROFESSIONAL ENGINEER
MARK A. WHITAKER — PROFESSIONAL ENGINEER
CONSTRUCTION CHECK — DATE
CONSTRUCTION CHECK — DATE